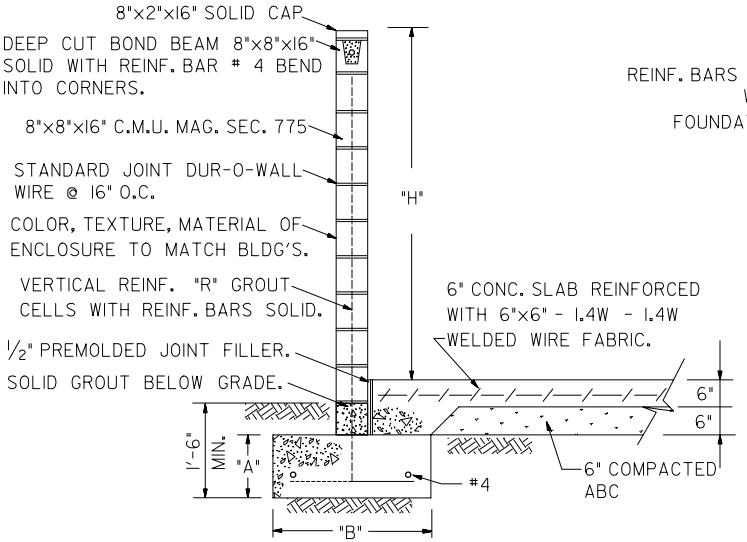

SECTION A-A

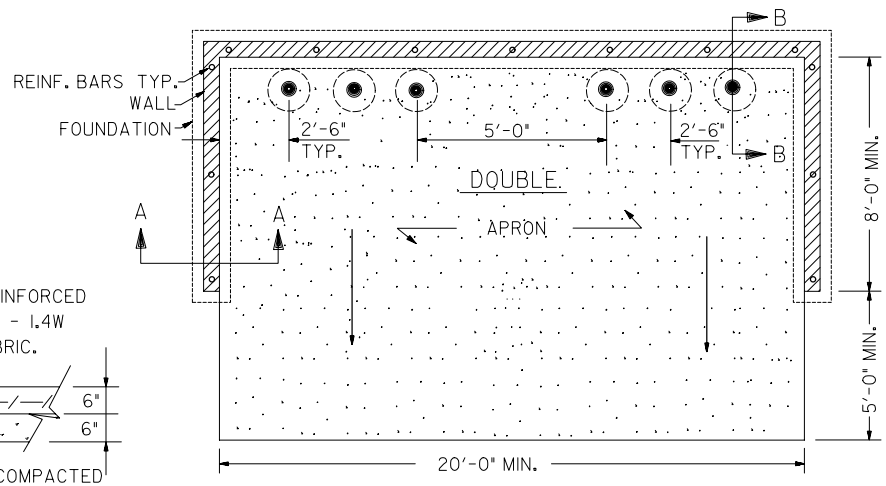

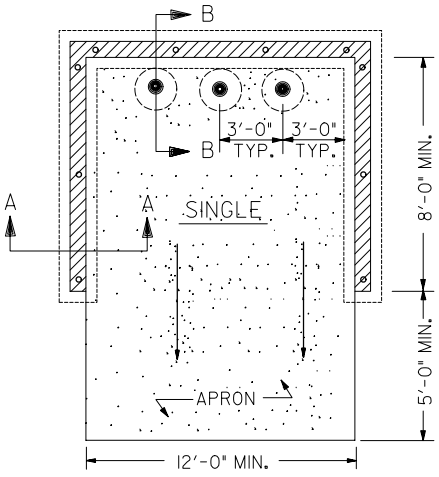

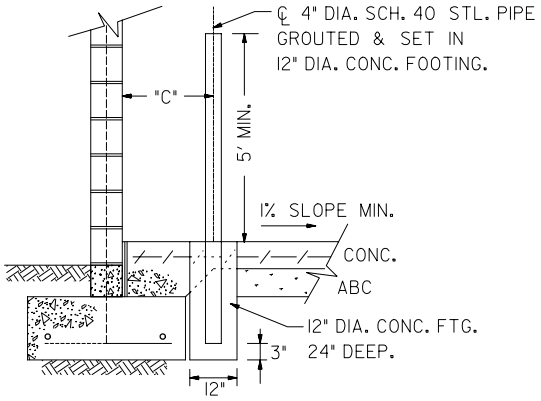

SECTION B-B

NOTES:

-CONSTRUCT ENCLOSURE PER M.A.G. SECTION 510.

-4" DIA. SCH. 40 STL. PIPE GUARD POSTS SHALL RECEIVE A ZINC CHROMATE PRIME COAT AND 2 COATS FLAT MATTE PAINT TO MATCH ENCLOSURE.

-ALL INTERIOR PAD DIMENSIONS ARE MINIMUMS.

-CONCRETE f'_c =3,000 psi

-REINFORCING f_y =60,000 psi

f_s =24,000 psi

-MASONRY f_m =1,500 psi

TABLE # 1

"H"	"A"	"B"	"R"	"C"
6'-0"	12"	24"	#4 @ 48"	14"
7'-0"	12"	24"	#5 @ 48"	14"
8'-0"	12"	24"	#5 @ 48"	14"
9'-0"	12"	28"	#6 @ 48"	16"
10'-0"	12"	30"	#6 @ 48	17"

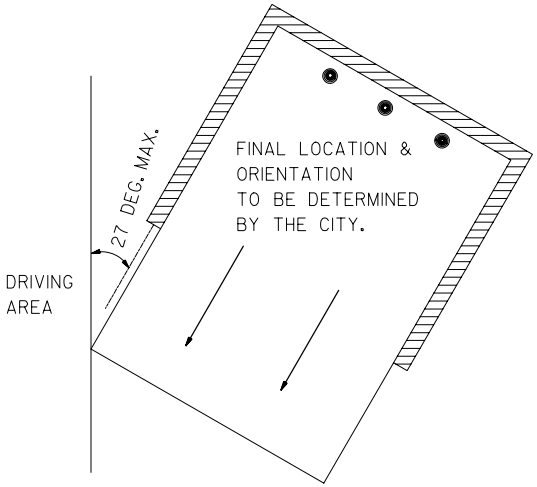

CITY OF TEMPE DEVELOPMENT SERVICES DEPARTMENT	STANDARD REFUSE AREA	DETAIL DS-116 REVISED 2005