CITY OF TEMPE
PUBLIC WORKS DEPARTMENT
DIVISION OF ENGINEERING

McCLINTOCK DRIVE WIDENING IMPROVEMENTS

DEL RIO DRIVE TO BROADWAY ROAD
PROJECT NO. 5408751A

LOCATED IN A PORTION OF:
SE & NE 1/4 SEC 23, T1N, R4E; SW & NW 1/4 SEC 24, T1N, R4E
SW & NW 1/4 SEC 25, T1N, R4E; SE & NE 1/4 SEC 26, T1N, R4E

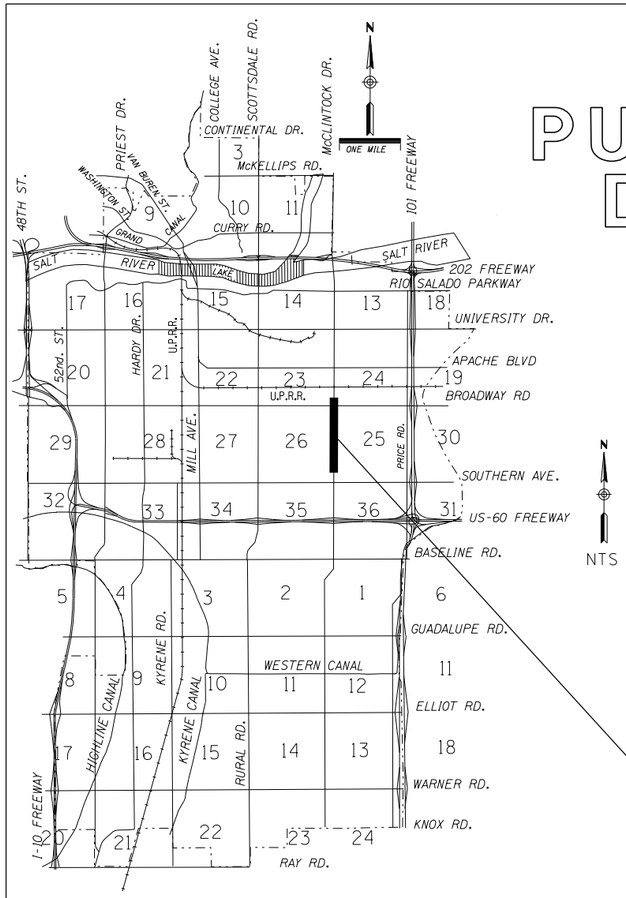

SHEET INDEX

DESCRIPTION	SHEET NO.
COVER	1
GENERAL NOTES	2
SURVEY CONTROL	3
KEY MAP	4
TYPICAL SECTIONS	5-6
DETAILS	7-14
PAVING PLAN & PROFILES	15-26
GEOMETRIC DETAILS	27
TRAFFIC SIGNAL NOTES & PLANS	28-37
PAVEMENT MARKING NOTES & PLANS	38-44

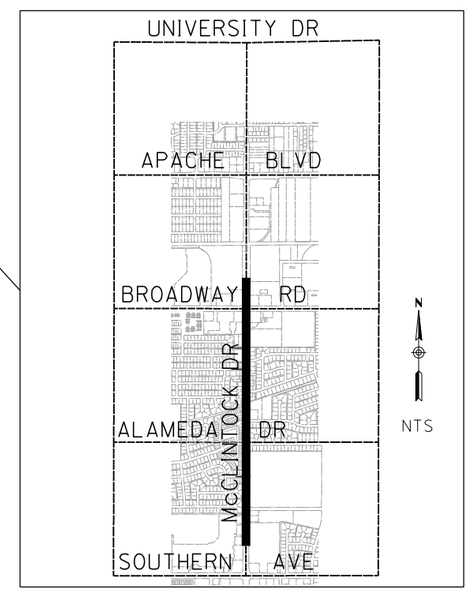

VICINITY MAP

CONTACT:
CITY OF TEMPE
JULIAN DRESANG, PE, PTOE
31 EAST 5TH STREET
TEMPE, AZ 85280
480.350.8200

ENGINEER:
PAUL BALCH, PE
DIBBLE ENGINEERING
7878 NORTH 16TH STREET
SUITE 300
PHOENIX, AZ 85020
602.957.1155

BENCHMARK:
POINT NO 1375
COT POINT 197
BRASS CAP IN HANDHOLE
McCLINTOCK RD & BROADWAY RD
COT PUBLISHED ELEVATION = 1182.78

REVISIONS

NO.	DESCRIPTION	DATE

JOE FORKERT - NO CONFLICT	10/20
AT & T	**DATE**
CLEM HELMSTETTER - CONFLICTS NOTED	10/20
CENTURYLINK	**DATE**
FRANK CANALES - CONFLICTS NOTED	10/20
COX COMMUNICATIONS	**DATE**
MICHAEL DOUGHTY - NO CONFLICT	10/20
SALT RIVER PROJECT-WATER	**DATE**
VINCE SILVESTRO - CONFLICTS NOTED	10/20
SALT RIVER PROJECT-POWER	**DATE**
ANDY SAKS - ADJUST VALVE BOXES	10/20
SOUTHWEST GAS CORP.	**DATE**

APPROVED

DEPUTY PUBLIC WORKS DIRECTOR / CITY ENGINEER — **DATE**

N/A
MARICOPA COUNTY ENVIRONMENTAL SERVICES DEPARTMENT — **DATE**

Registered Professional Engineer (Civil) CERTIFICATE NO. 40957 PAUL J. BALCH Date Signed 10/29/20 Arizona U.S.A.

REFERENCE ¼ SECTION LOCATION:	AS-BUILT INFORMATION IS INCLUDED IN THESE AREAS ON THIS SET OF DRAWINGS	PERMITS REQUIRED FOR THIS SET OF DRAWINGS
	___ ☐ SEWER ___ ☐ FIRE LINE	___ DRAINAGE
	___ ☐ WATER ___ ☐ CITY IRRIG.	___ PAVING
	___ ☐ WATER-RECLAIMED ___ ☐ BIKE PATH	___ WATER
	___ ☐ STORM DRAIN/DRYWELL ___ ☐ LNDSCPE/SPRKLR	___ SEWER
	___ ☐ PAVING ___ ☐ STREET LIGHTS	___ STREET LIGHTS
	___ ☐ OFFSITE (C,G,S,W,DW) ___ ☐ BUILDINGS	___ FLOODPLAIN
	___ ☐ GRADING/DRAINAGE ___ ☐ _____	___ OTHER _____
	AS-BUILT PLANS CHECKED FOR FIELD CHANGES	PARCEL # _____
	INSPECTOR: _____ DATE: _____	PROJECT # _____

TITLE: McCLINTOCK DRIVE WIDENING IMPROVEMENTS

EN# _____

PROJECT # 5408751A DS# _____

MAYOR
COREY D. WOODS

VICE MAYOR
RANDY KEATING

CITY COUNCIL
JENNIFER ADAMS
ROBIN ARREDONDO-SAVAGE
DOREEN GARLID
LAUREN KUBY
JOEL NAVARRO

CITY MANAGER
ANDREW CHING

CITY ENGINEER
JULIAN DRESANG, PE, PTOE

GENERAL NOTES:

1. ALL CONSTRUCTION UNDER THE PUBLIC WORKS PERMIT SHALL CONFORM TO THE CITY OF TEMPE SUPPLEMENT TO THE MAG SPECIFICATIONS & DETAILS, MARICOPA ASSOCIATION OF GOVERNMENTS UNIFORM STANDARD SPECIFICATIONS & DETAILS (MAG SPECIFICATION & DETAILS), & CITY OF TEMPE TRAFFIC BARRICADE MANUAL.

2. A PERMIT ISSUED BY THE ENGINEERING DIVISION SHALL BE REQUIRED FOR ALL WORK IN THE CITY OF TEMPE RIGHTS OF WAY. AN INVESTIGATION FEE, IN THE AMOUNT GREATER OF $250.00 OR DOUBLE THE PERMIT FEE, NOT TO EXCEED $2,500, WILL BE CHARGED FOR ANY WORK W/THE CITY OF TEMPE RIGHTS-OF-WAY IN WHICH A PERMIT HAS NOT BEEN ISSUED PRIOR TO COMMENCEMENT OF WORK.

3. THE CITY SHALL BE NOTIFIED PRIOR TO ANY CONSTRUCTION WORK. CALL THE ENGINEERING REQUEST LINE AT (480) 350-8475 AT LEAST ONE BUSINESS DAY BEFORE START OF CONSTRUCTION TO REQUEST INSPECTIONS. CONSTRUCTION WORK CONCEALED WITHOUT INSPECTION BY THE CITY SHALL BE SUBJECT TO EXPOSURE AT THE CONTRACTOR'S EXPENSE.

4. RIGHT OF WAY IMPROVEMENTS SHALL NOT BE ACCEPTED UNTIL 3 MIL MINIMUM DOUBLE MATTE BLACK LINE MYLAR REPRODUCIBLE "AS-BUILT" PLANS HAVE BEEN SUBMITTED TO & APPROVED BY THE ENGINEERING DIVISION.

5. LOCATION OF ALL WATER VALVES, MANHOLES, & CLEANOUTS MUST BE REFERENCED AT ALL TIMES DURING CONSTRUCTION & MADE AVAILABLE TO THE WATER & WASTEWATER DIVISION.

6. NO JOB WILL BE CONSIDERED COMPLETE UNTIL ALL CURBS, PAVEMENT, & SIDEWALKS HAVE BEEN SWEPT CLEAN OF ALL DIRT & DEBRIS & ALL SURVEY MONUMENTS ARE INSTALLED ACCORDING TO THE PLANS.

7. THE CITY WILL NOT PARTICIPATE IN THE COST OF CONSTRUCTION, UTILITY RELOCATION, CONSTRUCTION STAKING, OR AS-BUILT PLANS.

8. ALL EXISTING STREET MONUMENTS MUST BE PRESERVED. PRIOR TO CONSTRUCTION, MONUMENTS WILL BE REFERENCE HORIZONTALLY & VERTICALLY. AFTER CONSTRUCTION, MONUMENTS SHALL BE RESET & FIELD NOTES, INCLUDING NEW ELEVATION, SHALL BE FILED W/THE CITY.

9. FIRE RISER, DETAILS & FDC ARE FOR REFERENCE ONLY & ARE NOT APPROVED ON THESE DRAWINGS. FIRE SPRINKLER PLANS MUST BE SUBMITTED FOR SEPARATE FIRE DEPARTMENT REVIEW & APPROVAL.

10. ALL OVERHEAD UTILITY LINES (OTHER THAN TRANSMISSION LINES 12.5KV OR GREATER) THAT ON OR ADJACENT TO THE SITE, INCLUDING STREET OR ALLEY CROSSINGS, SHALL BE PLACED UNDERGROUND PER CITY CODE SECTION 25-120 THROUGH SECTION 25-126 & ORDINANCE NO. 88.85.

11. ALL ONSITE PRIVATE UTILITIES & DETAILS SHOWN IN THESE PLANS ARE FOR REFERENCE ONLY & ARE NOT APPROVED ON THESE DRAWINGS. SEE PLANS THAT ARE APPROVED BY BUILDING SAFETY FOR ONSITE PRIVATE UTILITIES.

12. THIS SET OF PLANS HAS BEEN REVIEWED FOR COMPLIANCE W/CITY REQUIREMENTS PRIOR TO ISSUANCE OF CONSTRUCTION PERMITS. HOWEVER, SUCH REVIEW SHALL NOT PREVENT THE CITY FROM REQUIRING CORRECTION OF ERRORS IN PLANS FOUND TO BE IN VIOLATION OF ANY LAW OR ORDINANCE. IT IS THE RESPONSIBILITY OF THE PROFESSIONAL ENGINEER SEALING & SIGNING THESE PLANS TO BE CERTAIN THAT THEY ARE IN FULL COMPLIANCE W/TEMPE STANDARDS, DETAILS, CRITERION, LAWS & ORDINANCES.

13. THE CITY DOES NOT WARRANT ANY QUANTITIES SHOWN ON THESE PLANS.

GENERAL NOTES (CONTINUED):

14. THE CITY APPROVAL IS FOR GENERAL LAYOUT IN THE RIGHT-OF-WAY, ON-SITE GRADING, DRAINAGE, WATER & SEWER. THIS PLAN CHECK APPROVAL IS VALID FOR A PERIOD OF ONE YEAR FROM APPLICATION DATE. CONSTRUCTION PERMITS SHALL BE OBTAINED DURING THIS PERIOD OR THE PLANS SHALL BE RESUBMITTED FOR REVIEW & APPROVAL. ONE 6 MONTH EXTENSION MAY BE GRANTED UPON REQUEST IF THE REQUEST IS MADE PRIOR TO THE EXPIRATION OF THE ONE YEAR PERIOD AT A COST OF 25% OF THE TOTAL PLAN CHECK FEE. PERMITS MUST THEN BE ISSUED W/IN 6 MONTHS & THEY WILL BE VALID FOR ONE YEAR FROM ISSUE DATE, OTHERWISE, THE PROJECT EXPIRES & PERMITS ARE VOIDED.

15. AN APPROVED SET OF PLANS SHALL BE AVAILABLE ON THE JOB SITE AT ALL TIMES.

16. CONSTRUCTION ITEMS SHALL NOT BE ACCEPTED UNTIL 3 MIL MINIMUM DOUBLE MATTE BLACK LINE MYLAR REPRODUCIBLE "AS-BUILT" PLANS HAVE BEEN SUBMITTED TO & APPROVED BY THE ENGINEERING DIVISION.

17. THE CONTRACTOR SHALL CONTACT ARIZONA BLUE STAKE AT 602-263-1100 AT LEAST 48 HOURS PRIOR TO CONSTRUCTION.

18. THE CONTRACTOR SHALL BARRICADE CONSTRUCTION SITES AT ALL TIMES PER THE CITY OF TEMPE TRAFFIC BARRICADE MANUAL. WHEN REQUIRED BY THE CITY, A TRAFFIC CONTROL PLAN SHALL BE SUBMITTED FOR APPROVAL IN ADVANCE OF CONSTRUCTION.

19. THE CONTRACTOR MAY OBTAIN A FIRE HYDRANT METER FOR CONSTRUCTION WATER FROM CUSTOMER SERVICES. THIS METER SHOULD BE ORDERED TWO WORKING DAYS PRIOR TO THE START OF CONSTRUCTION. THE UNLAWFUL REMOVAL OF WATER FROM A FIRE HYDRANT IS A VIOLATION OF THE UNICIPAL CODE, PUNISHABLE BY FINE AND/OR IMPRISONMENT.

20. ALL BROKEN OR DISPLACED EXISTING CONCRETE CURB, GUTTER, OR SIDEWALK SHALL BE REMOVED & REPLACED AS DIRECTED BY THE CITY OF TEMPE ENGINEERING DIVISION INSPECTOR.

21. ALL CITY FACILITIES, ALLEY & ROADWAY SURFACES DAMAGED BY DEVELOPER / CONTRACTOR DURING CONSTRUCTION SHALL BE REPAIRED / RESTORED TO THE SATISFACTION OF THE CITY OF TEMPE ENGINEERING DIVISION INSPECTOR PER THE RESPECTIVE CITY AND/OR MAG STANDARD DETAIL.

ENGINEER'S NOTE:

1. THE CONTRACTOR SHALL BE RESPONSIBLE FOR ALL CONSTRUCTION SURVEY AND STAKING.

PAVING NOTES:

1. NO PAVING CONSTRUCTION SHALL BE STARTED UNTIL ALL UNDERGROUND UTILITIES WITHIN THE ROADWAY PRISM ARE COMPLETED.

2. THE MAXIMUM STAKE INTERVAL FOR GRADES OF 0.2% OR LESS SHALL BE 25' FOR CONCRETE WORK & 50' FOR ASPHALT ROADWAY SECTION, EXCEPT ON HORIZONTAL OR VERTICAL CURVES WHERE A MAXIMUM STAKE INTERVAL OF 20' FOR CONCRETE WORK SHALL BE REQUIRED. ALL CURB RETURNS SHALL BE STAKED AT THE PC, PT & THE MIDPOINT OF THE RETURN. NO GRADE STAKE INTERVAL SHALL EXCEED 50'.

3. GUTTERS WILL BE WATER TESTED IN THE PRESENCE OF THE CITY ENGINEER, OR DESIGNEE, TO INSURE PROPER DRAINAGE, PRIOR TO FINAL APPROVAL BY THE ENGINEERING DIVISION.

4. EXACT POINT OF MATCHING, TERMINATION & OVERLAY, IF NECESSARY, MAY BE DETERMINED IN THE FIELD BY THE ENGINEERING DIVISION.

5. UNDERGROUND STREET LIGHT & TRAFFIC SIGNAL CIRCUITS SHALL BE INSTALLED AS PART OF THE OFFSITE IMPROVEMENTS. NEW FOUNDATIONS FOR TRAFFIC SIGNAL POLES SHALL BE POURED FAR ENOUGH IN ADVANCE TO ALLOW SUFFICIENT TIME FOR CONCRETE CURING & FOR SCHEDULING THE RELOCATION OF THE EXISTING TRAFFIC SIGNALS.

6. ADDRESS OVERLAY REQUIREMENTS WHERE OPEN CUTTING IS PERMITTED. FINISH PAVEMENT SURFACE MATERIALS SUCH AS RUBBERIZED ASPHALT SHALL BE MATCHED IN FIELD.

7. PAVING IMPROVEMENTS SHALL NOT BE ACCEPTED UNTIL 3 MIL MINIMUM DOUBLE MATTE BLACK LINE MYLAR REPRODUCIBLE "AS-BUILT" PLANS HAVE BEEN SUBMITTED TO & APPROVED BY THE ENGINEERING DIVISION.

STREET LIGHTING PLAN NOTES:

1. STREET LIGHTS TO BE STREAMLINE STEEL POLES & INSTALLED ON FOUNDATIONS PER CITY OF TEMPE STANDARD DETAIL T-651.

2. ALL STREET LIGHTS TO HAVE INDIVIDUAL PULL BOX (J-BOX), (PROVIDED BY THE UTILITY COMPANY), INSTALLED WITHIN 2' TO 4' FROM THE BASE OF THE POLE & PER CITY OF TEMPE STANDARD DETAIL T-650.

3. ALL STREET LIGHTS TO BE 2' FROM BACK OF CURB WHERE RECESSED OR NO SIDEWALK EXISTS, OR 2' BACK OF WALK TO THE FACE OF POLE UNLESS OTHERWISE APPROVED BY CITY.

4. ALL STREET LIGHT CONDUITS TO BE 2-1/2" PVC SCHEDULE 40.

5. STREET LIGHTING IMPROVEMENTS SHALL NOT BE ACCEPTED UNTIL 3 MIL MINIMUM DOUBLE MATTE BLACK LINE MYLAR REPRODUCIBLE "AS-BUILT" PLANS HAVE BEEN SUBMITTED TO & APPROVED BY THE ENGINEERING DIVISION.

Contact Arizona 811 at least two full working days before you begin excavation
ARIZONA811 BLUE STAKE, INC.
Call 811 or click Arizona811.com

Registered Professional Engineer (Civil)
CERTIFICATE NO. 40957
PAUL J. BALCH
Date Signed 10/27/20
Arizona U.S.A.

DEPARTMENT OF PUBLIC WORKS		
CITY OF TEMPE DIVISION OF ENGINEERING		
P.O. BOX 5002 TEMPE, ARIZONA 85280		
SURVEYED: REK DESIGNED: JRH DRAWN: DBB CHECKED: PJB SCALE: N/A	DESCRIPTION McCLINTOCK DRIVE WIDENING IMPROVEMENTS GENERAL NOTES	DATE 10/2020 PROJECT NO. 5408751A SHT. 2 OF 44

POINT DATA TABLE				
POINT NO	GROUND NORTHING	GROUND EASTING	ELEVATION	DESCRIPTION
186	273237.170	302595.863	1186.10	FND-BCHH
1011	281165.409	299981.362	1168.14	FND-BCHH
1013	281199.600	305234.209	1181.76	FND-BCHH COT
1375	275883.500	302600.600	1182.78	FND-BCHH

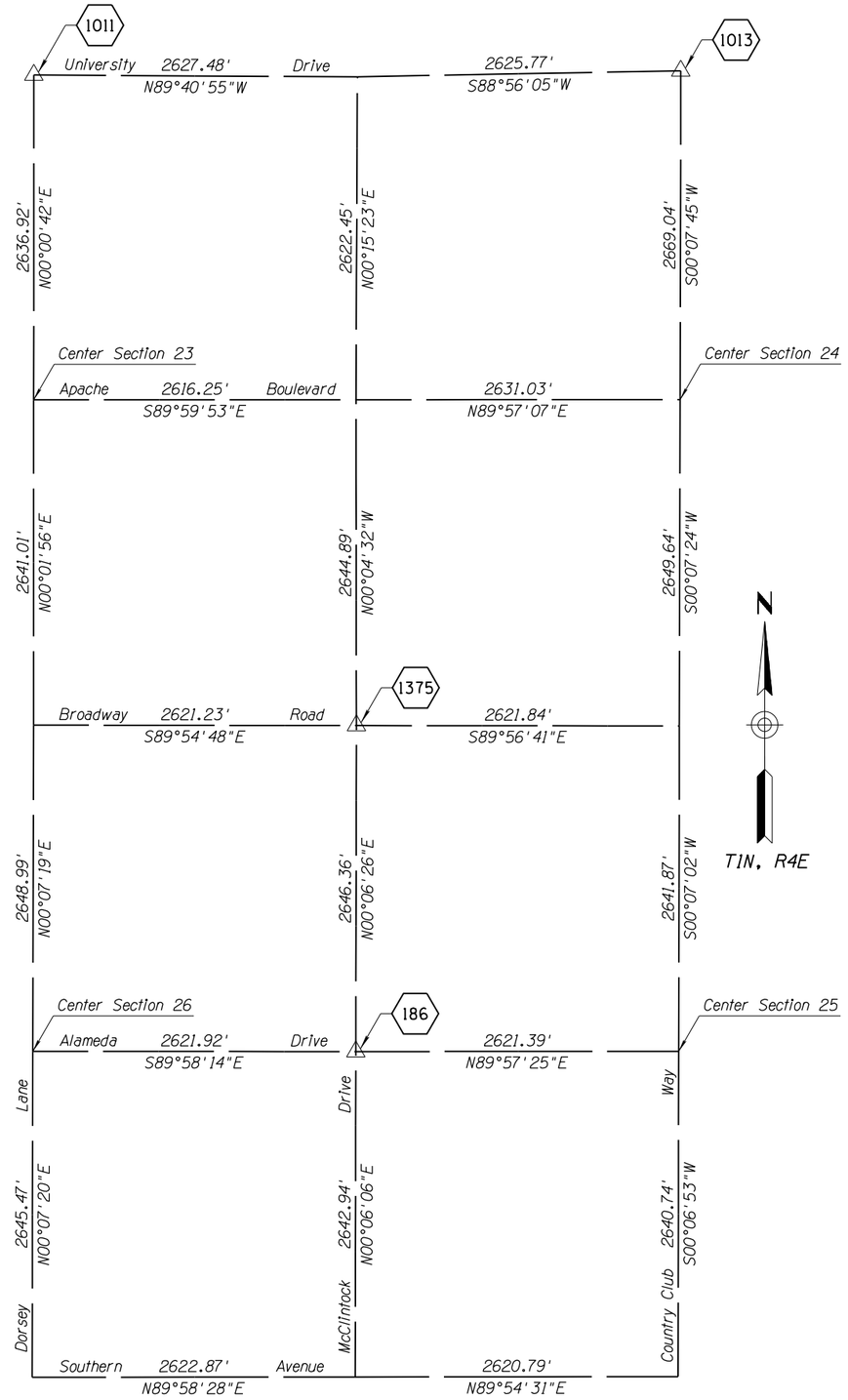

SURVEYOR NOTES:

1. Coordinates were verified in the field using real time kinematic GPS observations relative to ngs published control points.
2. Surveyed during the month of January 2018 by Dibble Engineering.
3. Contractor shall verify horizontal and vertical controls in the field prior to construction.
4. Project Meta Data
   Units:
   Coordinates, distances and elevations are shown in International Feet.

   Horizontal Datum: City of Tempe horizontal and vertical control network.

   Horizontal Adjustment: none

   Vertical Datum: City of Tempe (NVGD29)

   Project Benchmark:
   Point Number 1375
   Found Tempe benchmark (#197) at McClintock Rd & Broadway Rd, described as:
   Brasscap in handhole
   Northing = 275883.50
   Easting = 302600.60
   COT Published Elevation = 1182.78
5. The coordinates presented are shown to three decimal places for calculation purposes and are not representative of the precision of the survey measurements.
6. This is not a property boundary survey.

Contact Arizona 811 at least two full working days before you begin excavation
ARIZONA811 BLUE STAKE, INC.
Call 811 or click Arizona811.com

Registered Land Surveyor
CERTIFICATE NO.
47537
JASON P. GRAHAM
Date Signed 10/29/20
ARIZONA, U.S.A.

DEPARTMENT OF PUBLIC WORKS
CITY OF TEMPE
DIVISION OF ENGINEERING
P.O. BOX 5002 TEMPE, ARIZONA 85280

SURVEYED: REK	DESCRIPTION	DATE 10/2020
DESIGNED: JRH	McCLINTOCK DRIVE WIDENING IMPROVEMENTS SURVEY CONTROL	PROJECT NO. 5408751A
DRAWN: DBB		
CHECKED: PJB		
SCALE: 1" = 600'		SHT. 3 OF 44

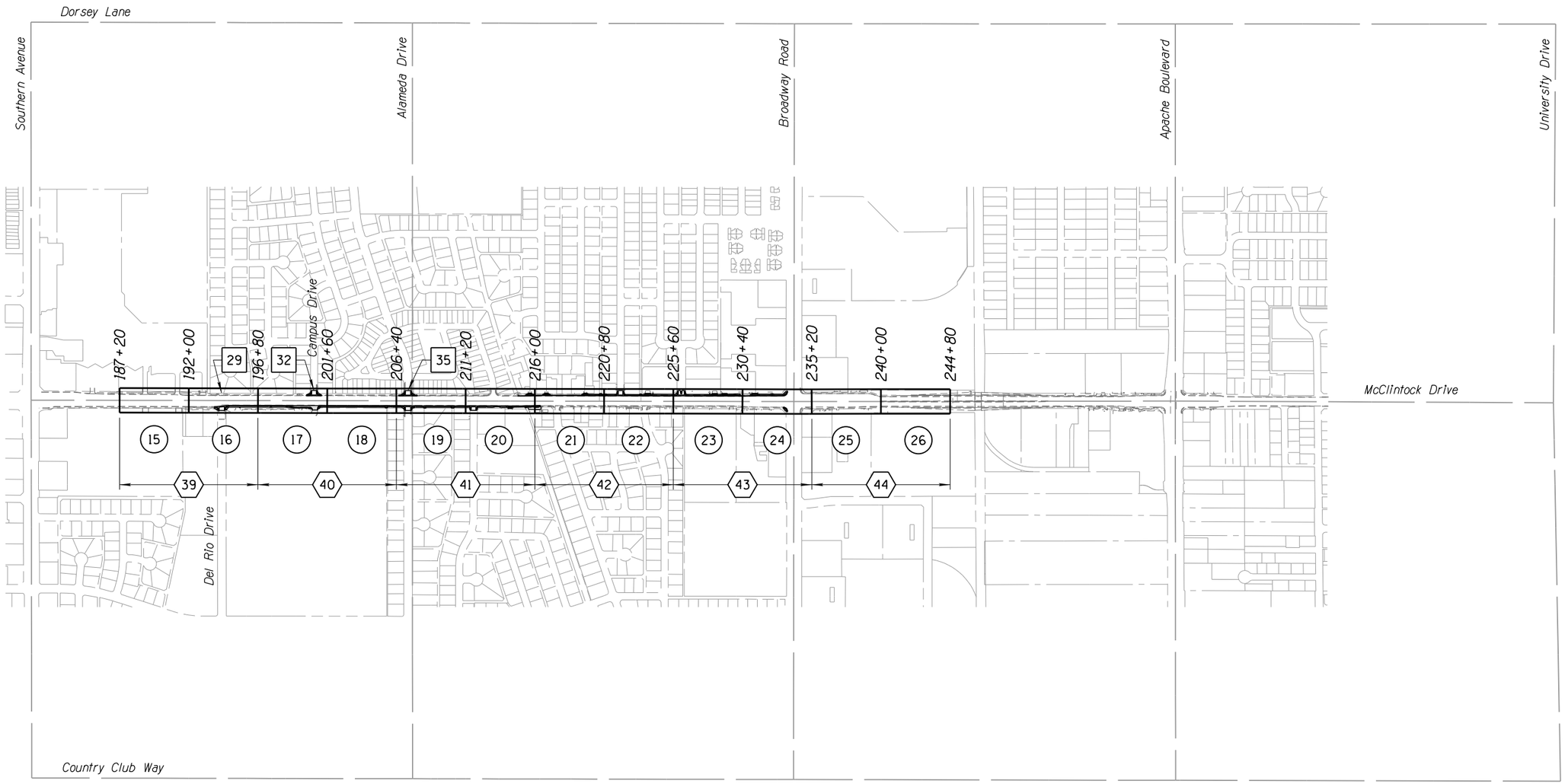

LEGEND

(XX) Paving Plan & Profile Sheet Number

[XX] Traffic Signal Sheet Number

⟨XX⟩ Pavement Marking Plan Sheet Number

200 0 200 400
Scale in Feet

Contact Arizona 811 at least two full working days before you begin excavation
ARIZONA811 BLUE STAKE, INC.
Call 811 or click Arizona811.com

Registered Professional Engineer (Civil)
CERTIFICATE NO. 40957
PAUL J. BALCH
Date Signed 10/29/20
Arizona U.S.A.

DEPARTMENT OF PUBLIC WORKS
CITY OF TEMPE
DIVISION OF ENGINEERING
P.O. BOX 5002 TEMPE, ARIZONA 85280

SURVEYED: REK	DESCRIPTION	DATE 10/2020
DESIGNED: JRH	McCLINTOCK DRIVE WIDENING IMPROVEMENTS KEY MAP	PROJECT NO. 5408751A
DRAWN: DBB		
CHECKED: PJB		
SCALE: 1" = 400'		SHT. 4 OF 44

10/29/2020 J:\2015\1015020.08 MCCLINTOCK DRIVE WIDENING IMPROVEMENTS\CAD_SOUTH\15020_08-KMAP.DGN

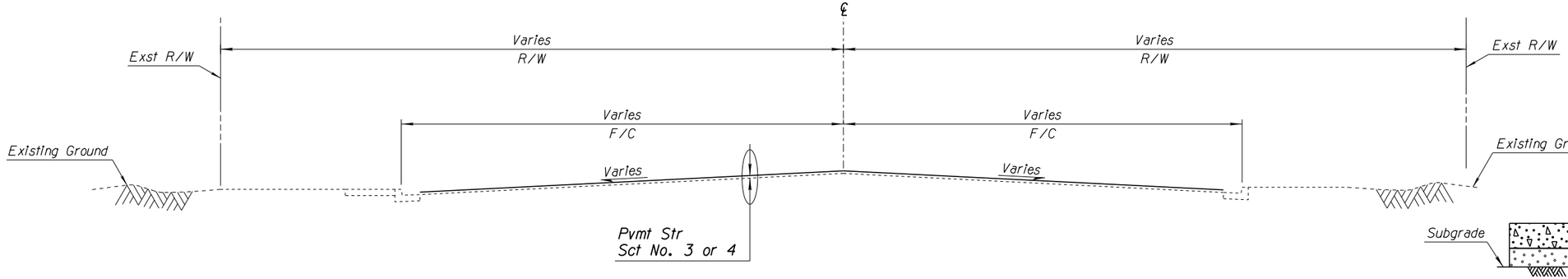

Typical Section
Sta 190+00.00 to Sta 193+77.00 - PSS No. 3
Sta 236+50.00 to Sta 239+60.00 - PSS No. 4
Sta 258+16.50 to Sta 259+64.00 - PSS No. 3
Sta 260+92.00 to Sta 265+20.00 - PSS No. 3

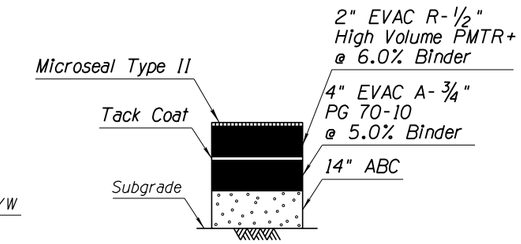

Total Thickness = 20"
SECTION NO. 1
McClintock Dr Widening

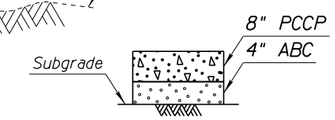

Total Thickness = 12"
SECTION NO. 2
Bus Bay &
Concrete Pavement
Behind Driveways

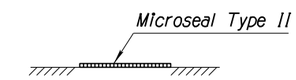

Total Thickness = N/A
SECTION NO. 3

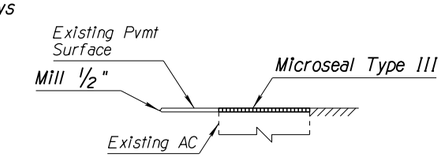

Total Thickness = ½"
SECTION NO. 4

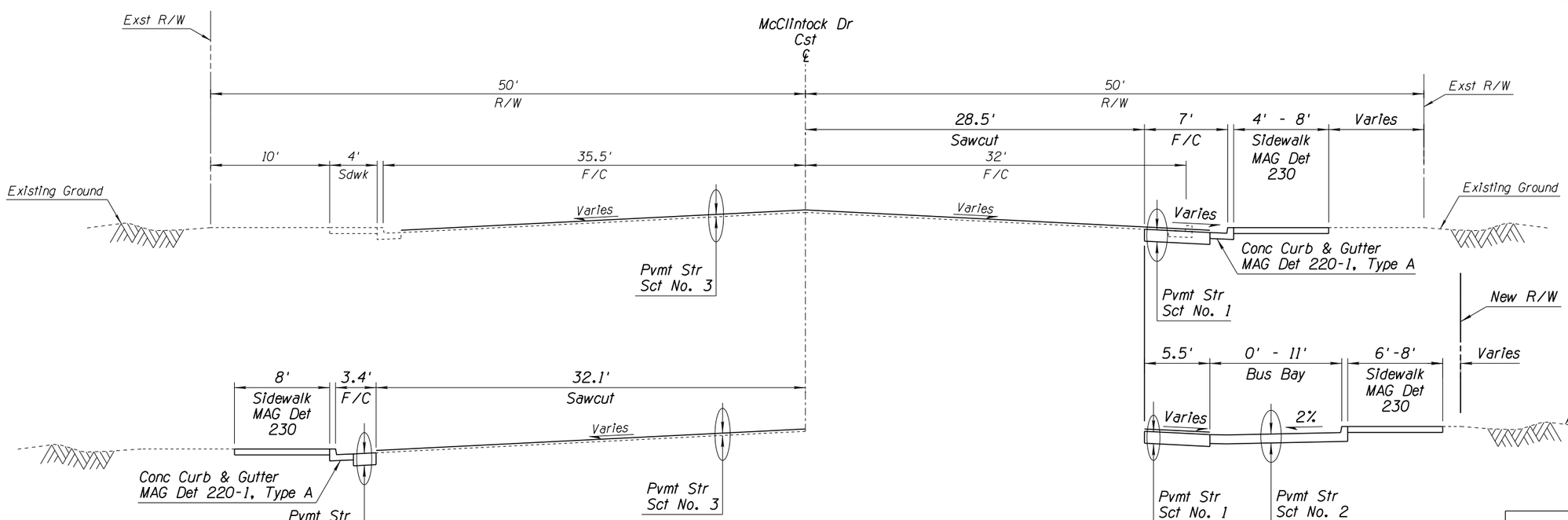

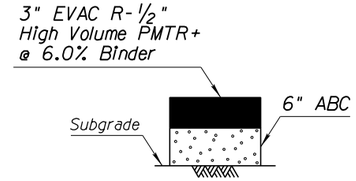

Total Thickness = 9"
SECTION NO. 5
Driveway Tie-Ins

Sta 200+15.52 to Sta 201+21.83
Sta 206+54.00 to Sta 207+85.00

McClintock Drive Typical Section
Sta 193+77.00 to Sta 214+81.00

Sta 198+65.00 to Sta 200+37.49

Contact Arizona 811 at least two full working days before you begin excavation
ARIZONA811
Call 811 or click Arizona811.com

Registered Professional Engineer (Civil)
CERTIFICATE NO. 40957
PAUL J. BALCH
Date Signed 10/29/20
Arizona U.S.A.

DEPARTMENT OF PUBLIC WORKS
CITY OF TEMPE
DIVISION OF ENGINEERING
P.O. BOX 5002 TEMPE, ARIZONA 85280

SURVEYED: REK	DESCRIPTION	DATE 10/2020
DESIGNED: JRH	McCLINTOCK DRIVE WIDENING IMPROVEMENTS TYPICAL SECTIONS 1	PROJECT NO. 5408751A
DRAWN: DBB		
CHECKED: PJB		
SCALE: N/A		SHT. 5 OF 44

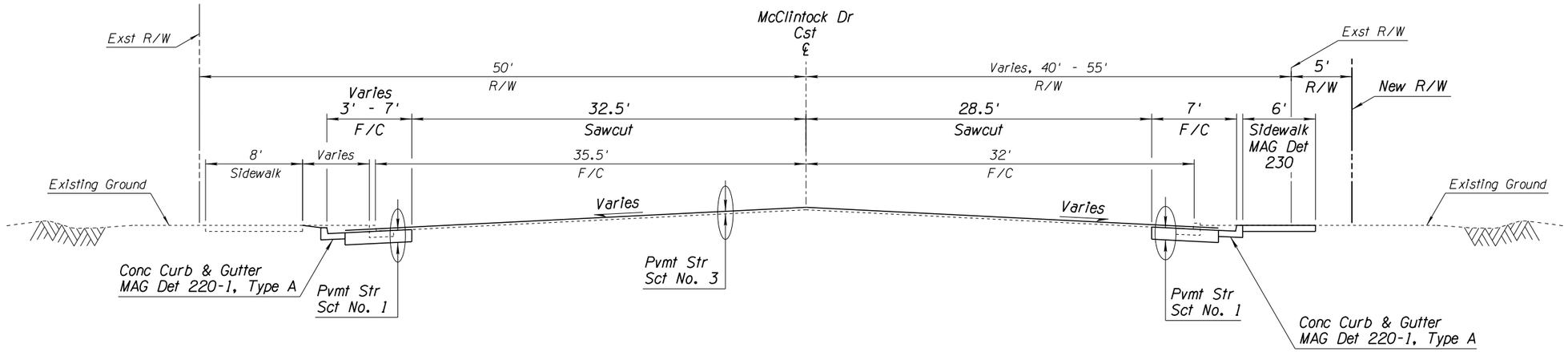

McClintock Drive Typical Section
Sta 214+81.00 to Sta 216+61.00

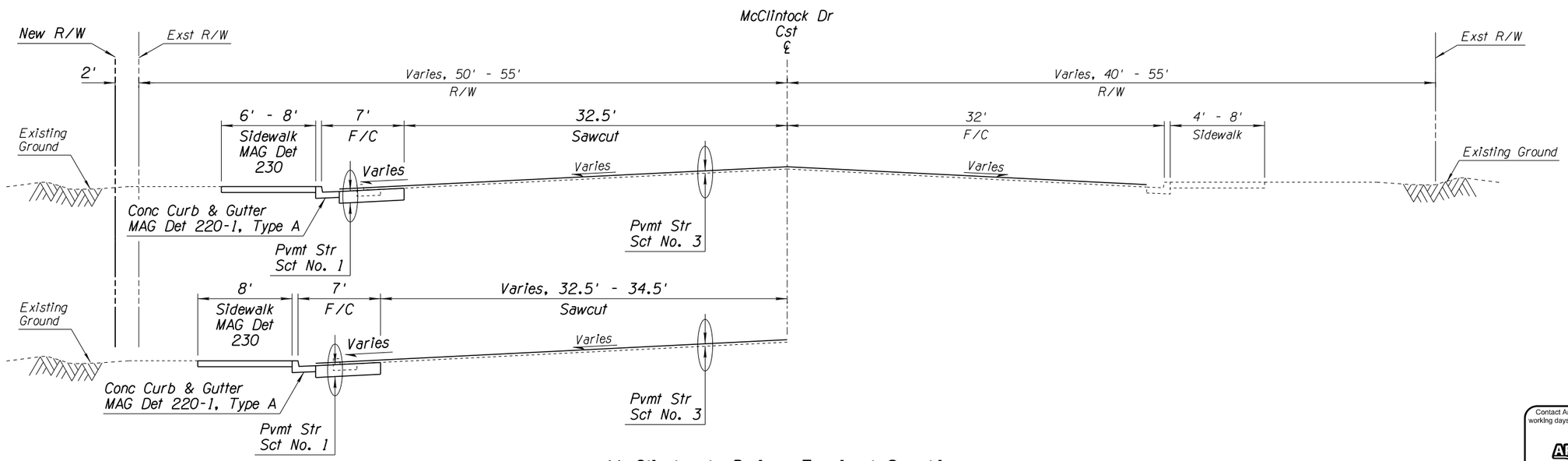

Sta 230+58.00 to Sta 233+21.60

McClintock Drive Typical Section
Sta 216+61.00 to Sta 233+21.60

Contact Arizona 811 at least two full working days before you begin excavation
ARIZONA811
Call 811 or click Arizona811.com

Registered Professional Engineer (Civil)
CERTIFICATE NO. 40957
PAUL J. BALCH
Date Signed 10/29/20
Arizona U.S.A.

DEPARTMENT OF PUBLIC WORKS C I T Y O F T E M P E D I V I S I O N O F E N G I N E E R I N G P.O. BOX 5002 TEMPE, ARIZONA 85280		
SURVEYED: REK DESIGNED: JRH DRAWN: DBB CHECKED: PJB SCALE: N/A	DESCRIPTION McCLINTOCK DRIVE WIDENING IMPROVEMENTS TYPICAL SECTIONS 2	DATE 10/2020 PROJECT NO. 5408751A SHT. 6 OF 44

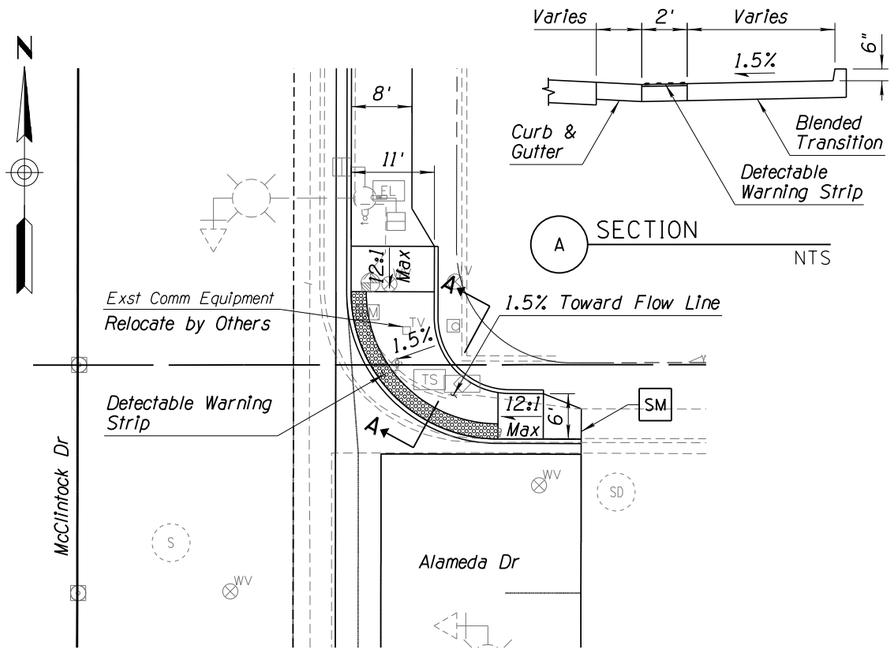

A SECTION
NTS

1 BLENDED TRANSITION
ALAMEDA DR & McCLINTOCK DR
NTS

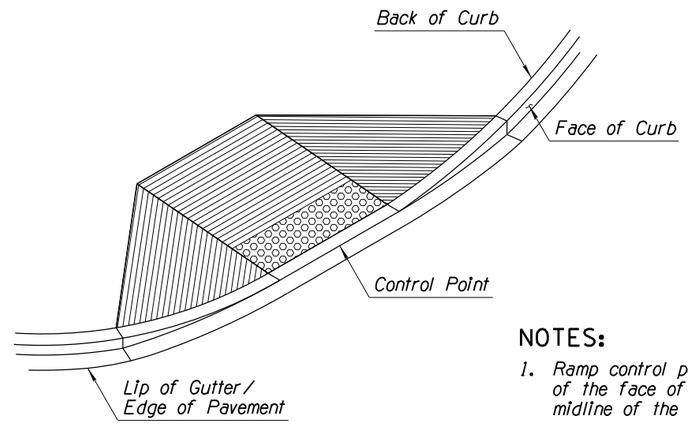

NOTES:

1. Ramp control point is the intersection of the face of curb and the projected midline of the sidewalk ramp.
2. See Geometric Details on Sheet 27 for Sidewalk Ramp Control Information.

2 SIDEWALK RAMP CONTROL
NTS

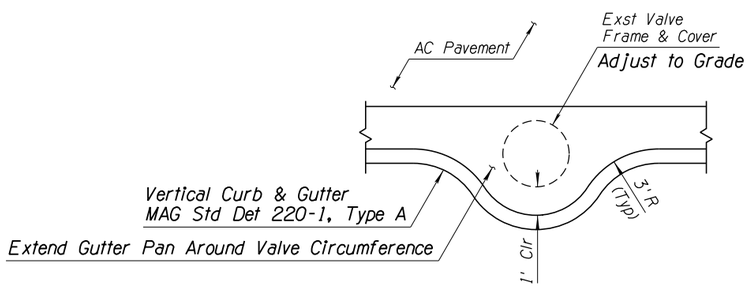

NOTES:

1. For notes and dimensions not provided, refer to MAG Std Det 220-1 & 222.

3 CURB OFFSET AT VALVE
NTS

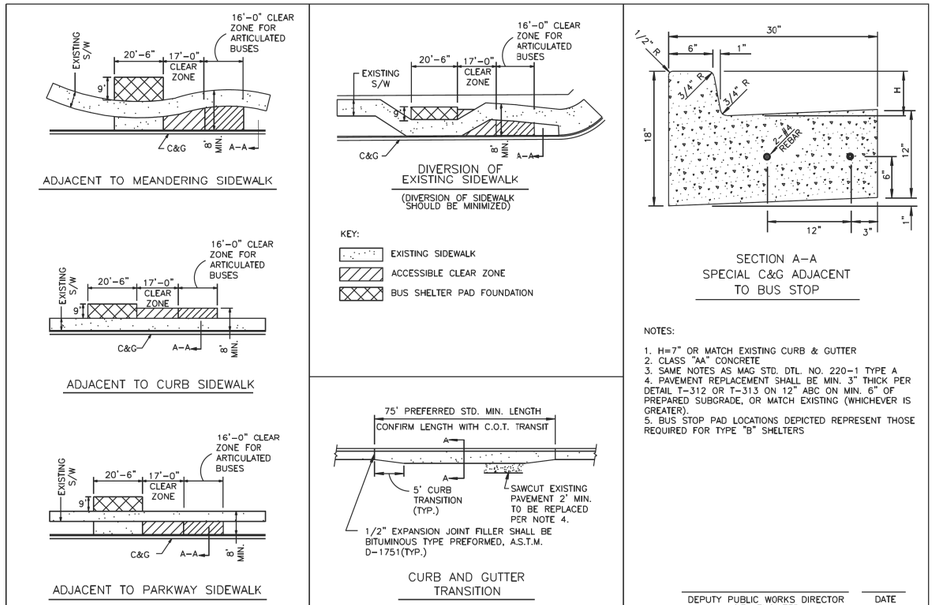

CITY OF TEMPE
PUBLIC WORKS DEPARTMENT

BUS SHELTER FOUNDATION LOCATION OPTIONS AND SPECIAL CURB & GUTTER
N.T.S.

DETAIL T-654
1 OF 21
REVISED 2015

Contact Arizona 811 at least two full working days before you begin excavation
ARIZONA811 BLUE STAKE, INC.
Call 811 or click Arizona811.com

Registered Professional Engineer (Civil)
CERTIFICATE NO. 40957
PAUL J. BALCH
Date Signed 10/29/20
Arizona U.S.A.

DEPARTMENT OF PUBLIC WORKS
CITY OF TEMPE
DIVISION OF ENGINEERING
P.O. BOX 5002 TEMPE, ARIZONA 85280

SURVEYED: REK	DESCRIPTION	DATE 10/2020
DESIGNED: JRH	McCLINTOCK DRIVE WIDENING IMPROVEMENTS DETAILS	PROJECT NO. 5408751A
DRAWN: DBB		
CHECKED: PJB		
SCALE:		SHT. 7 OF 44

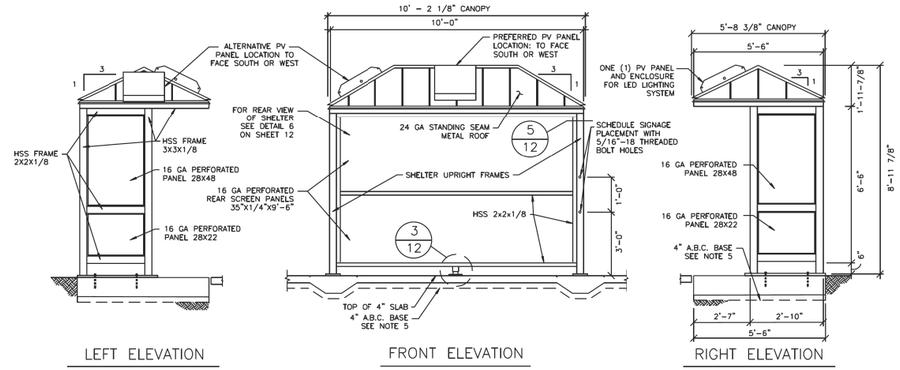

NOTES:

1. AN ARTIST-DESIGNED SHELTER MAY BE SUBSTITUTED FOR A TYPE "A" SHELTER BY APPROVAL OF CITY OF TEMPE TRANSIT DIVISION. HOWEVER, IT MUST INCORPORATE ALL THE FUNCTIONAL ELEMENTS INCLUDED IN THE TYPE "A" SHELTER. SEE TRANSIT & DESIGN REVIEW STAFF FOR DETAILS.

2. URBAN SOLAR CORP., MODEL RMS-80 WITH TWO (2) LED STRIP LIGHT FIXTURES, OR TEMPE APPROVED EQUAL. SEE SHEET 21 OF 21 FOR BUS SHELTER POWER AND LIGHT DETAIL.

3. SITE-SPECIFIC STYLE OF FURNITURE MAY BE REQUIRED IN SOME AREAS, AND ON ART SHELTERS. CONTACT THE TRANSIT DIVISION STAFF FOR DETAILS.

4. CITY OF TEMPE TRANSIT BUS SHELTERS SHALL BE PROVIDED WITH A GROUNDING SYSTEM THAT MAY CONSIST OF THE FOLLOWING METHOD: 25 FEET OF #4 STRANDED COPPER (UNINSULATED) INSTALLED IN THE BASE OF ONE OF THE UPRIGHT FOUNDATIONS. THE GROUNDING CONDUCTOR WILL EXTEND OUT OF THE POURED CONCRETE FOUNDATION WITH A LENGTH BETWEEN 2 AND 3 FEET. A FLAT FENDER WASHER WILL BE INSTALLED ON TOP OF THE CONDUCTOR WITH THE BOLT THROUGH THE FLAT WASHER AND SECURED IN THE TAPPED HOLE. GROUNDING METHOD WILL BE DONE IN ACCORDANCE WITH ARTICLE 250 OF NATIONAL ELECTRICAL CODE.

5. INSTALL 4" AGGREGATE BASE PER MARICOPA ASSOCIATION OF GOVERNMENTS UNIFORM STANDARD SPECIFICATIONS SECTION 310, UNLESS ALTERNATIVE APPROVED DESIGN IS PROVIDED BY A SOILS REPORT.

6. ALL EXPANSION JOINTS SHALL BE INSTALLED PER MARICOPA ASSOCIATION OF GOVERNMENTS UNIFORM STANDARD SPECIFICATIONS SECTION 340.

DESIGN NOTES:

GOVERNING CODE	2010 IBC
SOIL BEARING	1500 PSF
CONCRETE (ALL)	f'c28 = 2500 PSI
METALS	
ROLLED SHAPES AND PLATES	ASTM A36
PIPES	ASTM A53, GR.B
STRUCTURAL TUBING	ASTM A500, GR.C
10 GAGE BENT PLATE	ASTM A1011, GR.50
BOLTS	ASTM A307
ANCHOR BOLTS	ASTM F1554, GR.36
CONSTRUCTION TYPE	II-B
OCCUPANCY	B

DEPUTY PUBLIC WORKS DIRECTOR CITY ENGINEER — DATE

CITY OF TEMPE PUBLIC WORKS DEPARTMENT | BUS STOP PASSENGER SHELTER TYPE "A" – ELEVATIONS N.T.S. | DETAIL T-654 6 OF 21 REVISED 2015

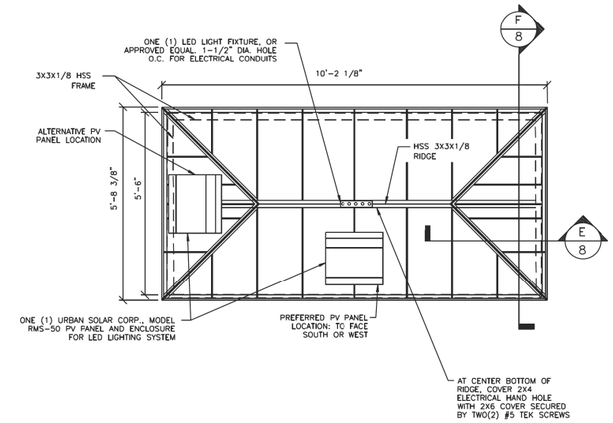

NOTES:

1. STANDING SEAM METAL ROOF – 24 GA. "BERRIDGE " CEE-LOCK PANELS, TOP SIDE COLOR TO BE "COPPER-COTE", UNDERSIDE COLOR TO BE FACTORY "WHITE".

DEPUTY PUBLIC WORKS DIRECTOR CITY ENGINEER — DATE

CITY OF TEMPE PUBLIC WORKS DEPARTMENT | BUS STOP PASSENGER SHELTER TYPE "A" – ROOF PLAN N.T.S. | DETAIL T-654 7 OF 21 REVISED 2015

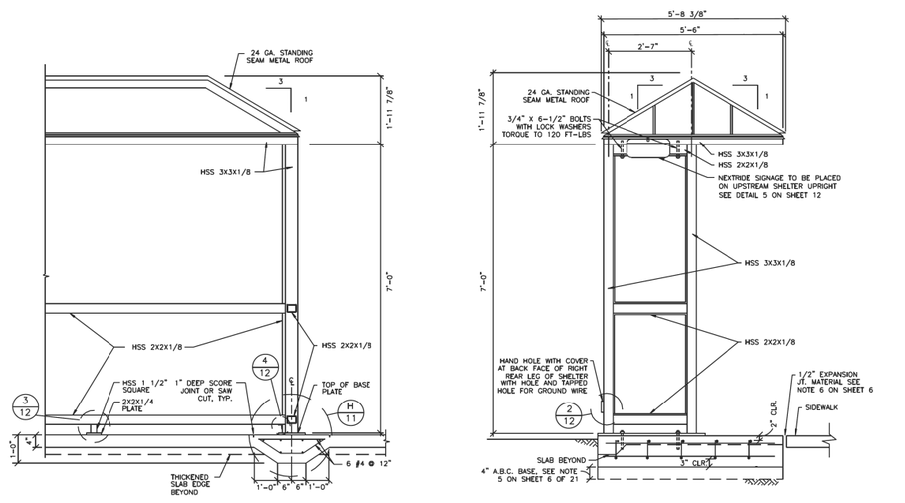

DEPUTY PUBLIC WORKS DIRECTOR CITY ENGINEER — DATE

CITY OF TEMPE PUBLIC WORKS DEPARTMENT | BUS STOP PASSENGER SHELTER TYPE "A" – FOUNDATION AND ROOF SECTIONS N.T.S. | DETAIL T-654 8 OF 21 REVISED 2015

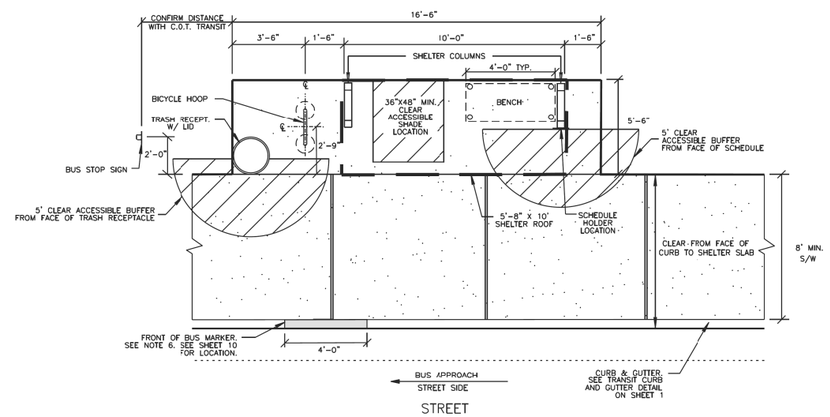

NOTES:

1. ALL HSS FRAMES & INFILL PANELS TO BE PAINTED SHERWIN WILLIAMS COLOR: TEMPE BRONZE: #B65-T-184
2. TRASH RECEPTACLE WITH LID – CONFIRM MFG & MODEL NO. W/ C.O.T. TRANSIT DIVISION DRILLED CONCRETE EXPANSION ANCHOR BOLT TO CONCRETE SLAB
3. BENCH – CONFIRM MFG. & MODEL NO. W/ C.O.T. TRANSIT DIVISION. DRILLED CONCRETE EXPANSION ANCHOR BOLT TO CONCRETE
4. BICYCLE HOOP – PER CITY OF TEMPE STD. DETAIL T-578
5. SCHEDULE HOLDER – TIP RCH-22 SCHEDULE HOLDER WITH TWO MOUNTING HOLES DRILLED AND TAPPED TO ACCEPT 5/16-18 THREADED BOLT
6. FRONT OF BUS MARKER – 4' LONG YELLOW 3M SERIES 380ES PAVEMENT MARKING PLACED ALONG TOP OF CURB. BY C.O.T. TRANSIT DIVISION.
7. BUS STOP SIGN – PLACEMENT TO BE FIELD DETERMINED AND CONFIRMED W/ C.O.T. TRANSIT DIVISION. BUS STOP SIGN POLE TO BE 1-3/4" SQUARE, 1" O.C. PERFORATED, AND POWDER-COATED TERRA BROWN (RAL 8028)

DEPUTY PUBLIC WORKS DIRECTOR CITY ENGINEER — DATE

CITY OF TEMPE PUBLIC WORKS DEPARTMENT | BUS STOP PASSENGER SHELTER TYPE "A" – FURNITURE CONFIGURATION N.T.S. | DETAIL T-654 9 OF 21 REVISED 2015

Contact Arizona 811 at least two full working days before you begin excavation
ARIZONA811 BLUE STAKE, INC.
Call 811 or click Arizona811.com

Registered Professional Engineer (Civil) CERTIFICATE NO. 40957 PAUL J. BALCH Date Signed 10/2/20 Arizona U.S.A.

DEPARTMENT OF PUBLIC WORKS
CITY OF TEMPE
DIVISION OF ENGINEERING
P.O. BOX 5002 TEMPE, ARIZONA 85280

SURVEYED: REK	DESCRIPTION	DATE 10/2020
DESIGNED: JRH	McCLINTOCK DRIVE WIDENING IMPROVEMENTS DETAILS	PROJECT NO. 5408751A
DRAWN: DBB		
CHECKED: PJB		
SCALE:		SHT. 8 OF 44

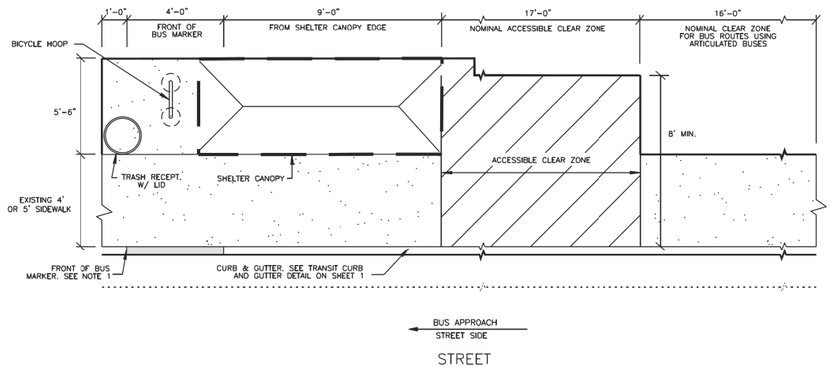

NOTES:

1. FRONT OF BUS MARKER – 4' LONG YELLOW 3M SERIES 380ES PAVEMENT MARKING PLACED ALONG TOP OF CURB. BY C.O.T. TRANSIT DIVISION.

DEPUTY PUBLIC WORKS DIRECTOR CITY ENGINEER — DATE

CITY OF TEMPE PUBLIC WORKS DEPARTMENT	BUS STOP PASSENGER SHELTER TYPE "A" – SITE LAYOUT WITH < 8' WIDE SIDEWALK N.T.S.	DETAIL T-654 10 OF 21 REVISED 2015

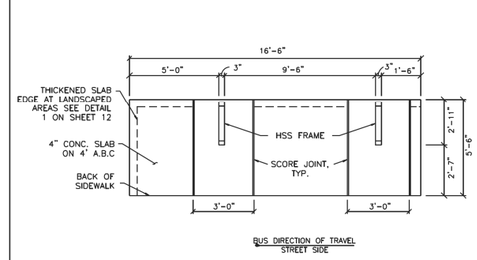

BUS SHELTER TYPE "A" – FOUNDATION PLAN

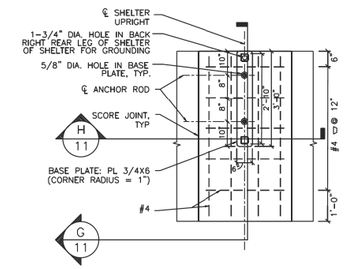

BASE PLATE PLAN

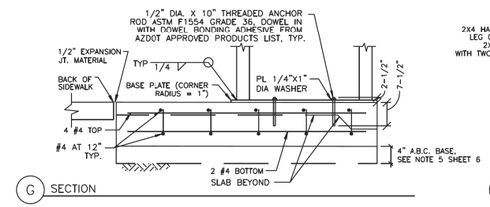

G SECTION

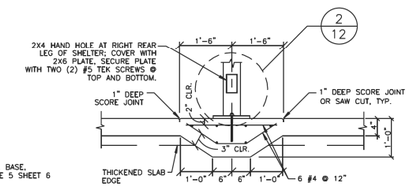

H SECTION

DEPUTY PUBLIC WORKS DIRECTOR CITY ENGINEER — DATE

CITY OF TEMPE PUBLIC WORKS DEPARTMENT	BUS STOP PASSENGER SHELTER TYPE "A" – FLOOR/FOUNDATION PLAN N.T.S.	DETAIL T-654 11 OF 21 REVISED 2015

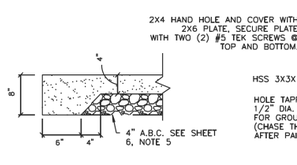

1 THICKENED EDGE (OPTIONAL)

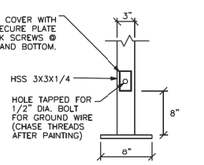

2 HAND HOLE AND COVER

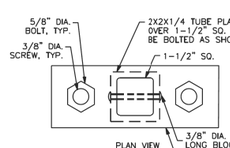

3 LAG BOLTS AT SCREEN SUPPORT

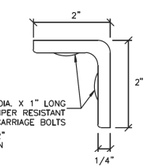

4 ANGLE SUPPORT

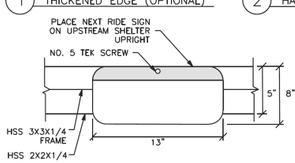

5 NEXTRIDE SIGN

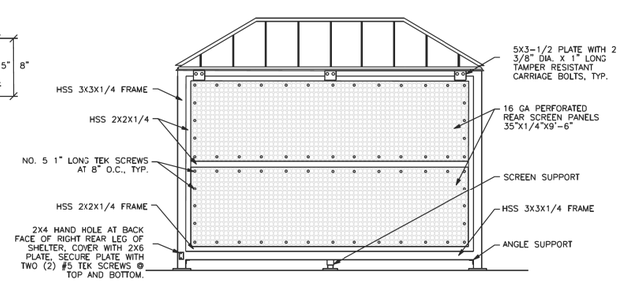

6 REAR VIEW OF SHELTER

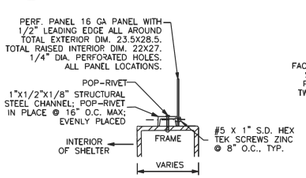

7 PERFORATED PANEL TO FRAME

DEPUTY PUBLIC WORKS DIRECTOR CITY ENGINEER — DATE

CITY OF TEMPE PUBLIC WORKS DEPARTMENT	BUS SHELTER TYPE "A" – TYPICAL DETAILS 1–6 N.T.S.	DETAIL T-654 12 OF 21 REVISED 2015

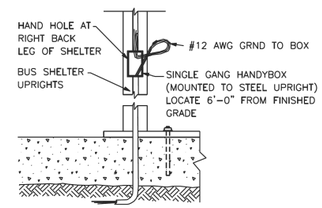

GROUNDING

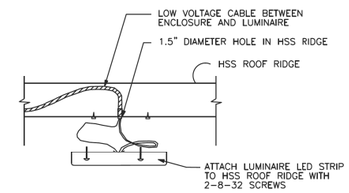

LIGHTING FIXTURE CONNECTION 12 VDC

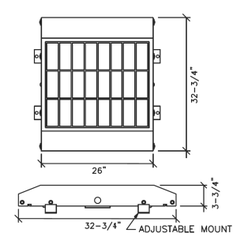

NOTE: HINGES ORIENTED TOWARDS RIDGE LINE

ROOF MOUNTED 50 WATT PV SYSTEM AND ENCLOSURE

FOR BUS SHELTER TYPE "A"

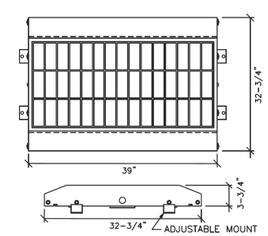

NOTE: HINGES ORIENTED TOWARDS RIDGE LINE

ROOF MOUNTED 80 WATT PV SYSTEM AND ENCLOSURE

FOR BUS SHELTER TYPE "B"

NOTES:

1. ALL GROUNDING WILL BE INSTALLED IN COMPLIANCE WITH ARTICLE 250 OF THE NATIONAL ELECTRICAL CODE.

DEPUTY PUBLIC WORKS DIRECTOR CITY ENGINEER — DATE

CITY OF TEMPE PUBLIC WORKS DEPARTMENT	BUS SHELTER TYPES "A" AND "B" LIGHTING DETAILS N.T.S.	DETAIL T-654 21 OF 21 REVISED 2015

Contact Arizona 811 at least two full working days before you begin excavation
ARIZONA811 BLUE STAKE, INC.
Call 811 or click Arizona811.com

Registered Professional Engineer (Civil) CERTIFICATE NO. 40957 PAUL J. BALCH Date Signed 10/2/20 Arizona U.S.A.

DEPARTMENT OF PUBLIC WORKS
C I T Y O F T E M P E
D I V I S I O N O F E N G I N E E R I N G
P.O. BOX 5002 TEMPE, ARIZONA 85280

SURVEYED: REK	DESCRIPTION	DATE 10/2020
DESIGNED: JRH	McCLINTOCK DRIVE WIDENING IMPROVEMENTS DETAILS	PROJECT NO. 5408751A
DRAWN: DBB		
CHECKED: PJB		
SCALE:		SHT. 9 OF 44

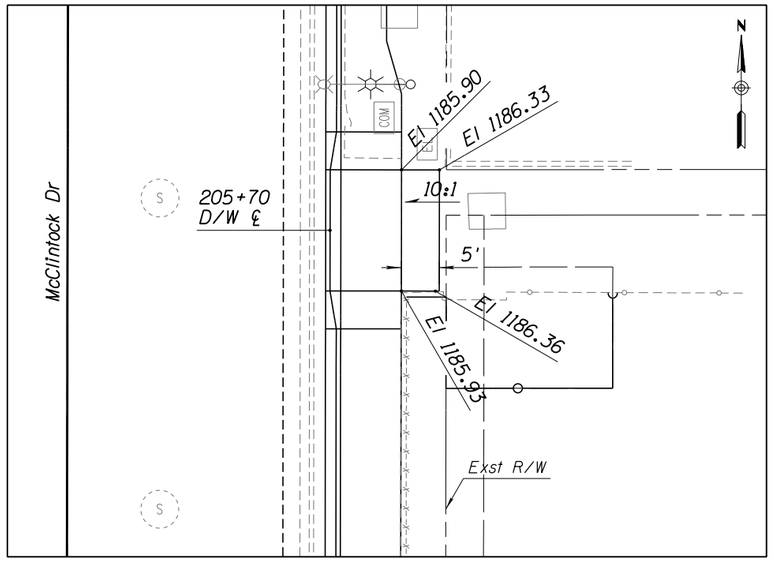

STA 205+70 RT DRIVEWAY GRADING DETAIL
SCALE: 1" = 10'

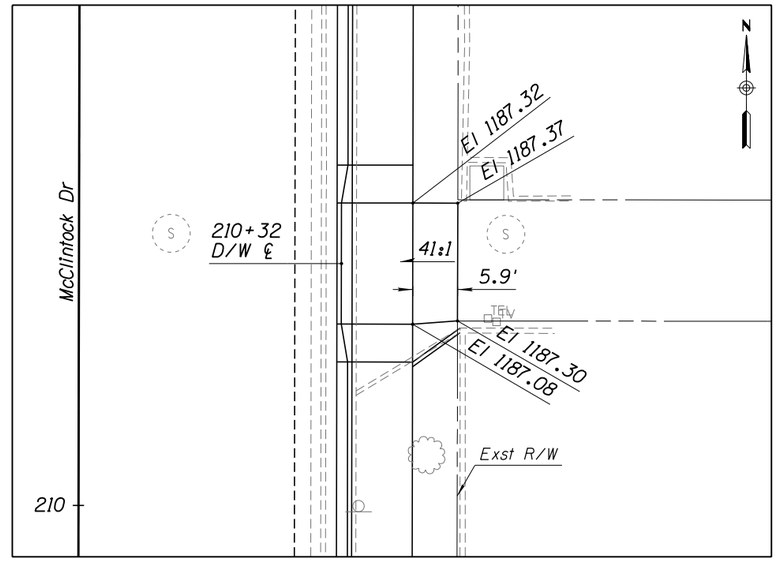

STA 210+32 RT DRIVEWAY GRADING DETAIL
SCALE: 1" = 10'

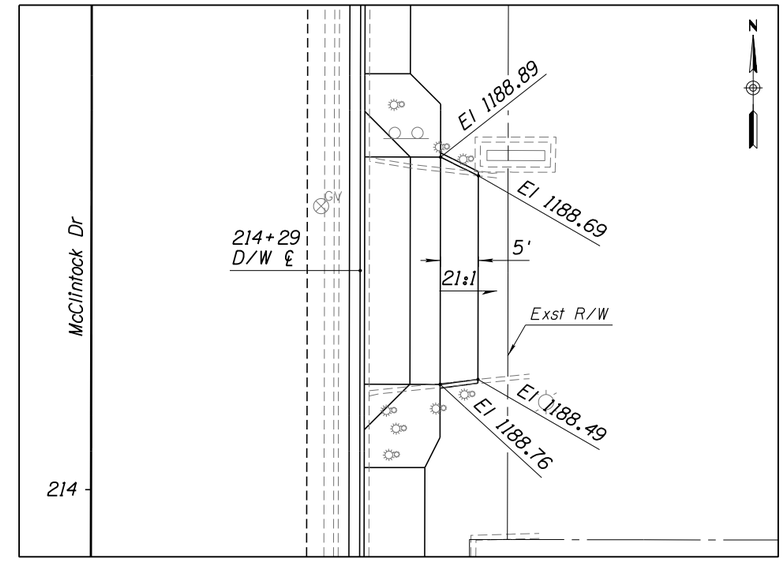

STA 214+29 RT DRIVEWAY GRADING DETAIL
SCALE: 1" = 10'

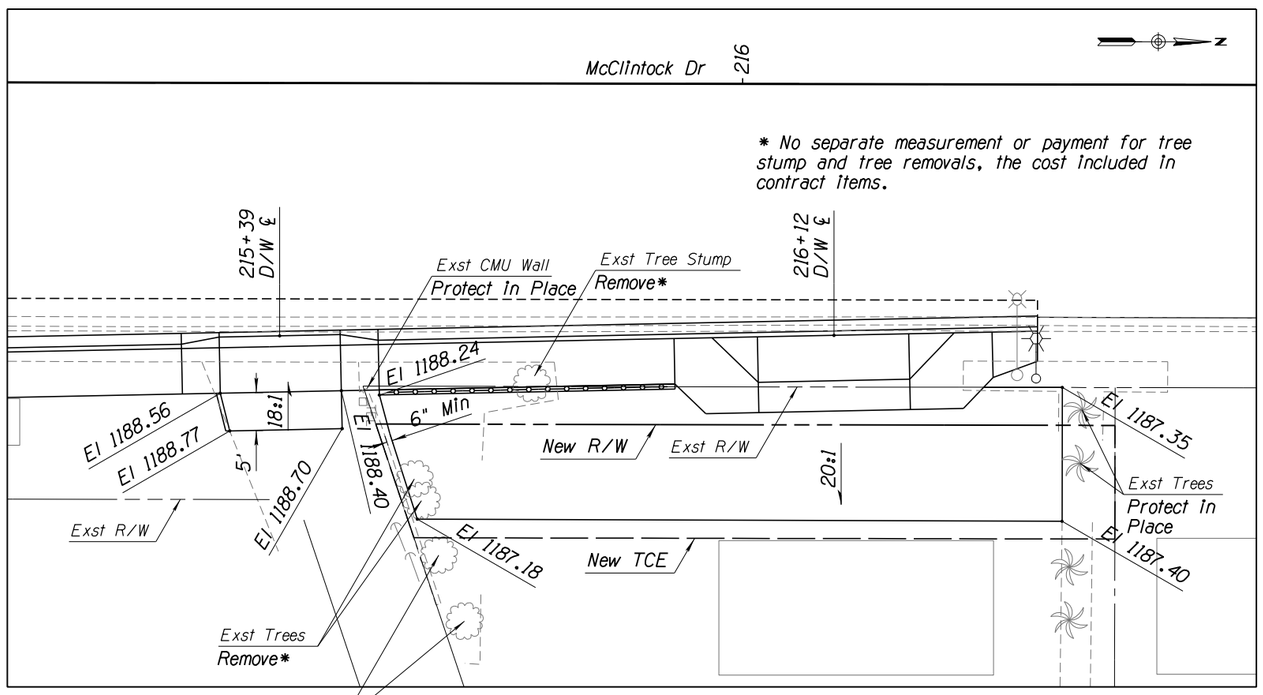

STA 215+39 RT & STA 216+12 RT
DRIVEWAY GRADING DETAIL
SCALE: 1" = 10'

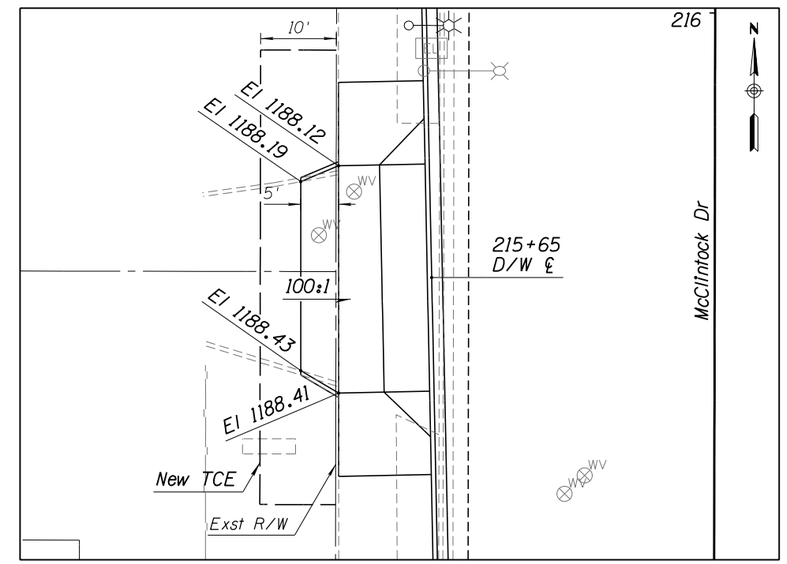

STA 215+65 LT DRIVEWAY GRADING DETAIL
SCALE: 1" = 10'

NOTES:

1. Refer to paving sheets for quantity takeoffs and construction details.
2. The maximum allowable grade break at driveway tie-ins shall be 9.7% for breakovers and 14.6% for dips.

Contact Arizona 811 at least two full working days before you begin excavation
ARIZONA811 BLUE STAKE, INC.
Call 811 or click Arizona811.com

Registered Professional Engineer (Civil) CERTIFICATE NO. 40957 PAUL J. BALCH Date Signed 10/29/20

DEPARTMENT OF PUBLIC WORKS		
CITY OF TEMPE DIVISION OF ENGINEERING P.O. BOX 5002 TEMPE, ARIZONA 85280		
SURVEYED: REK DESIGNED: JRH DRAWN: DBB CHECKED: PJB SCALE:	DESCRIPTION McCLINTOCK DRIVE WIDENING IMPROVEMENTS DETAILS	DATE 10/2020 PROJECT NO. 5408751A SHT. 10 OF 44

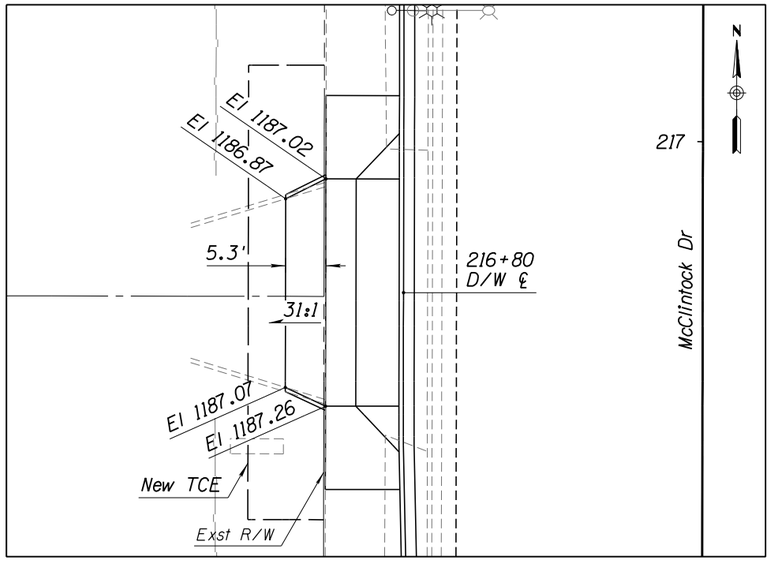

STA 216+80 LT DRIVEWAY GRADING DETAIL

SCALE: 1" = 10'

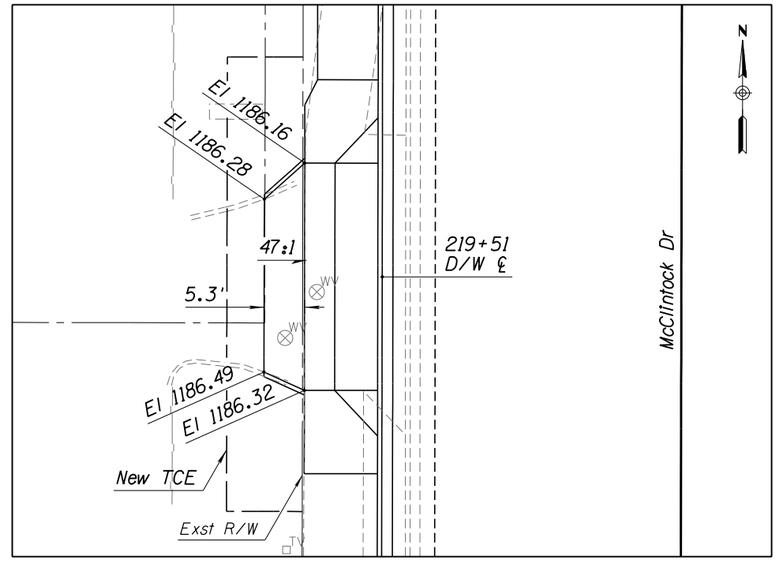

STA 219+51 LT DRIVEWAY GRADING DETAIL

SCALE: 1" = 10'

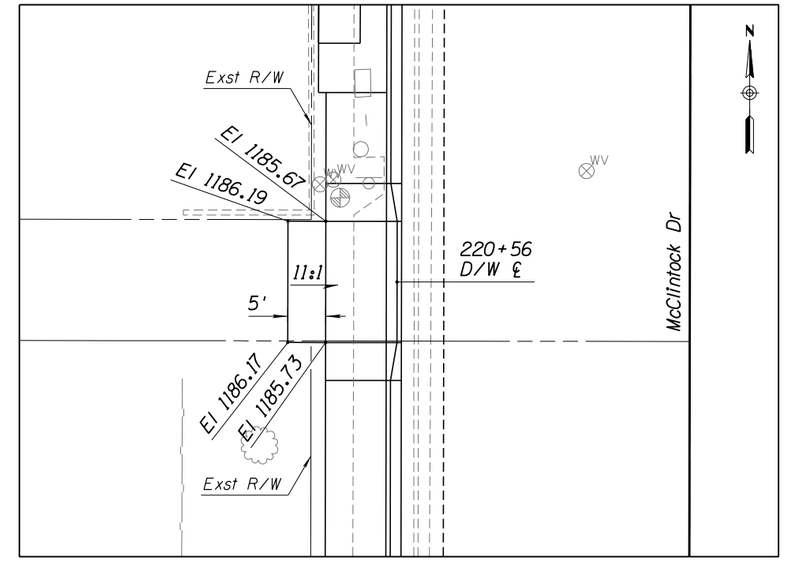

STA 220+56 LT DRIVEWAY GRADING DETAIL

SCALE: 1" = 10'

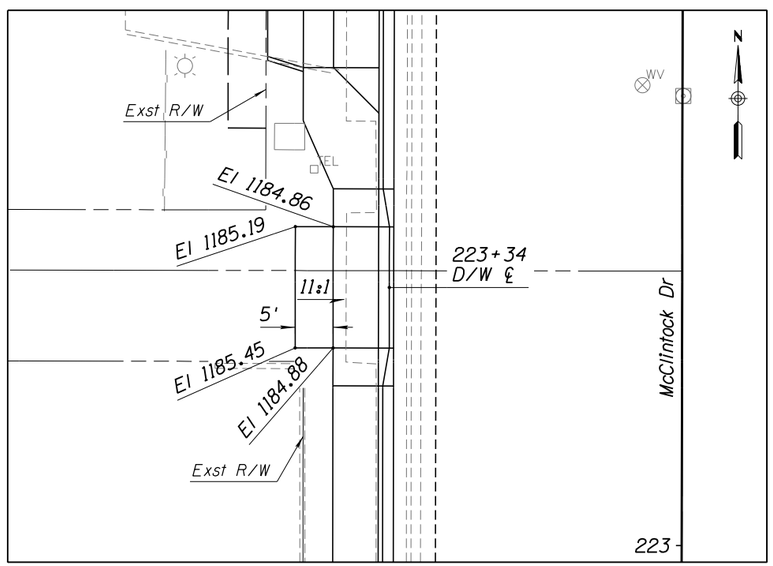

STA 223+34 LT DRIVEWAY GRADING DETAIL

SCALE: 1" = 10'

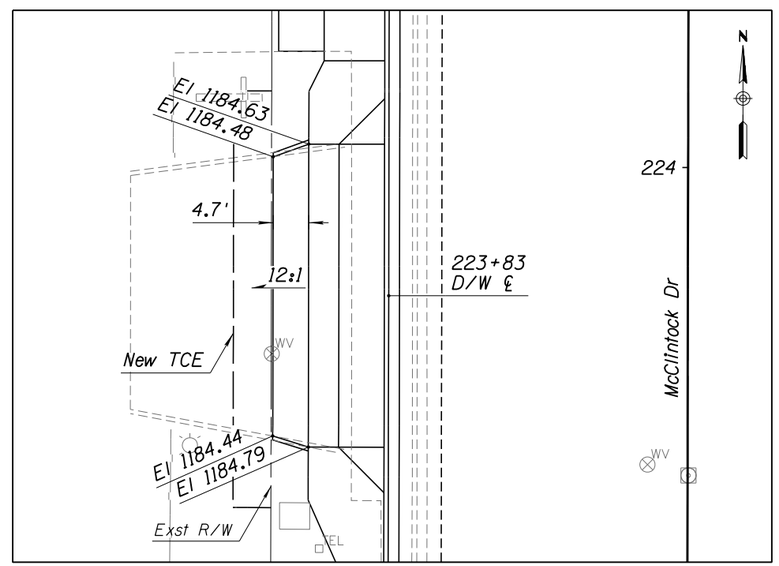

STA 223+83 LT DRIVEWAY GRADING DETAIL

SCALE: 1" = 10'

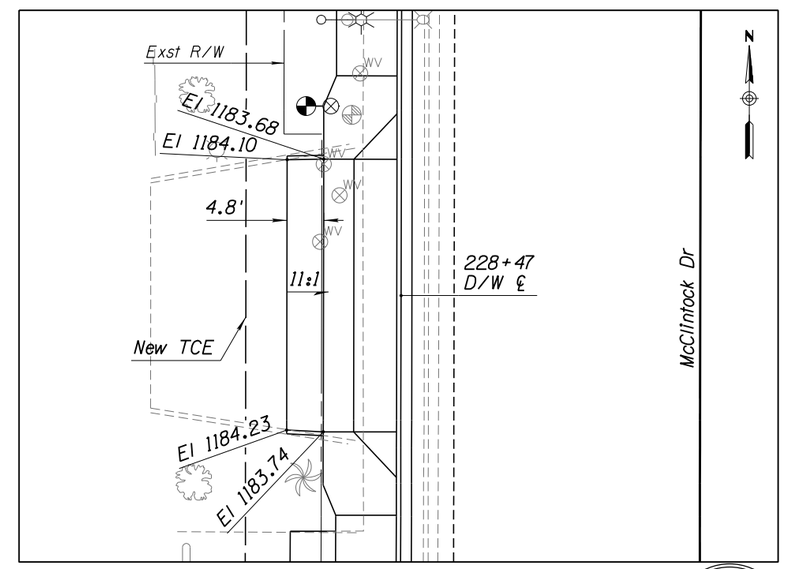

STA 228+47 LT DRIVEWAY GRADING DETAIL

SCALE: 1" = 10'

Registered Professional Engineer (Civil) CERTIFICATE NO. 40957 PAUL J. BALCH Date Signed 10/29/20

NOTES:

1. *Refer to paving sheets for quantity takeoffs and construction details.*
2. *The maximum allowable grade break at driveway tie-ins shall be 9.7% for breakovers and 14.6% for dips.*

Contact Arizona 811 at least two full working days before you begin excavation

ARIZONA811 BLUE STAKE, INC.

Call 811 or click Arizona811.com

DEPARTMENT OF PUBLIC WORKS CITY OF TEMPE DIVISION OF ENGINEERING P.O. BOX 5002 TEMPE, ARIZONA 85280		
SURVEYED: REK DESIGNED: JRH DRAWN: DBB CHECKED: PJB SCALE:	DESCRIPTION McCLINTOCK DRIVE WIDENING IMPROVEMENTS DETAILS	DATE 10/2020 PROJECT NO. 5408751A SHT. 11 OF 44

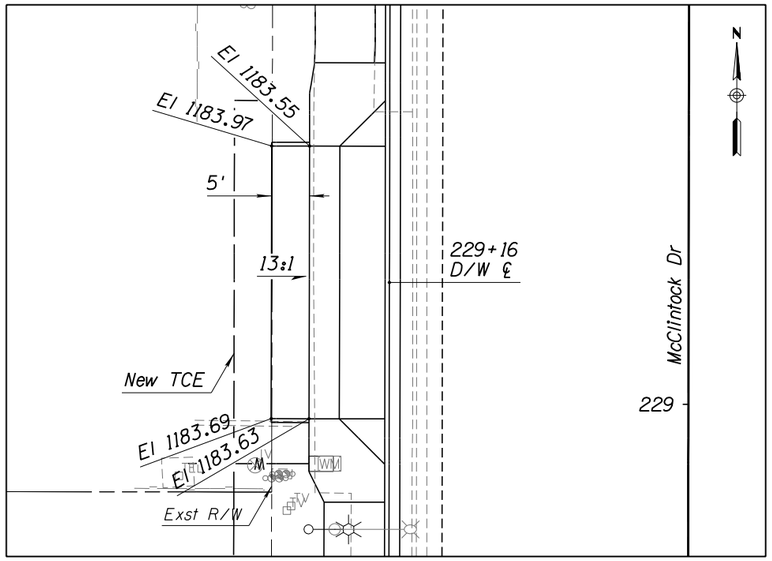

STA 229+16 LT DRIVEWAY GRADING DETAIL

SCALE: 1" = 10'

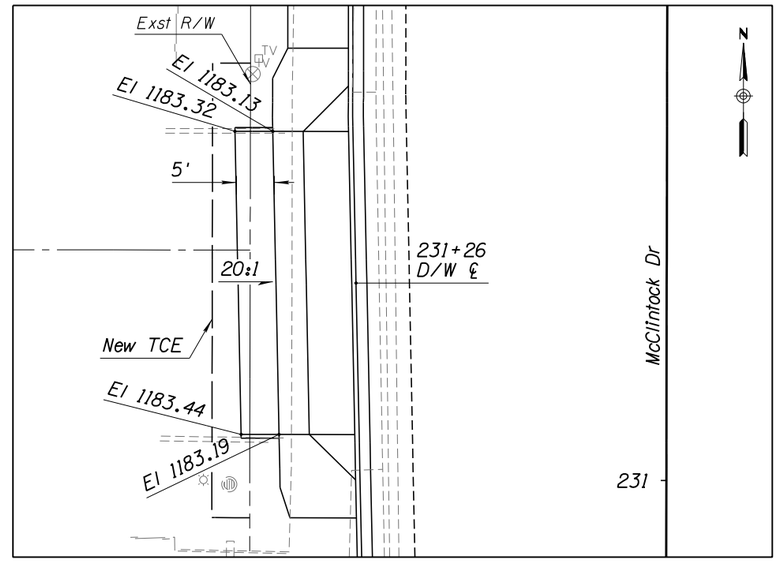

STA 231+26 LT DRIVEWAY GRADING DETAIL

SCALE: 1" = 10'

NOTES:

1. *Refer to paving sheets for quantity takeoffs and construction details.*
2. *The maximum allowable grade break at driveway tie-ins shall be 9.7% for breakovers and 14.6% for dips.*

Contact Arizona 811 at least two full working days before you begin excavation

ARIZONA811 BLUE STAKE, INC.

Call 811 or click Arizona811.com

Registered Professional Engineer (Civil) CERTIFICATE NO. 40957 PAUL J. BALCH Date Signed 10/29/20 Arizona U.S.A.

DEPARTMENT OF PUBLIC WORKS		
CITY OF TEMPE DIVISION OF ENGINEERING		
P.O. BOX 5002 TEMPE, ARIZONA 85280		
SURVEYED: REK	DESCRIPTION	DATE 10/2020
DESIGNED: JRH	McCLINTOCK DRIVE WIDENING IMPROVEMENTS DETAILS	PROJECT NO. 5408751A
DRAWN: DBB		
CHECKED: PJB		
SCALE:		SHT. 12 OF 44

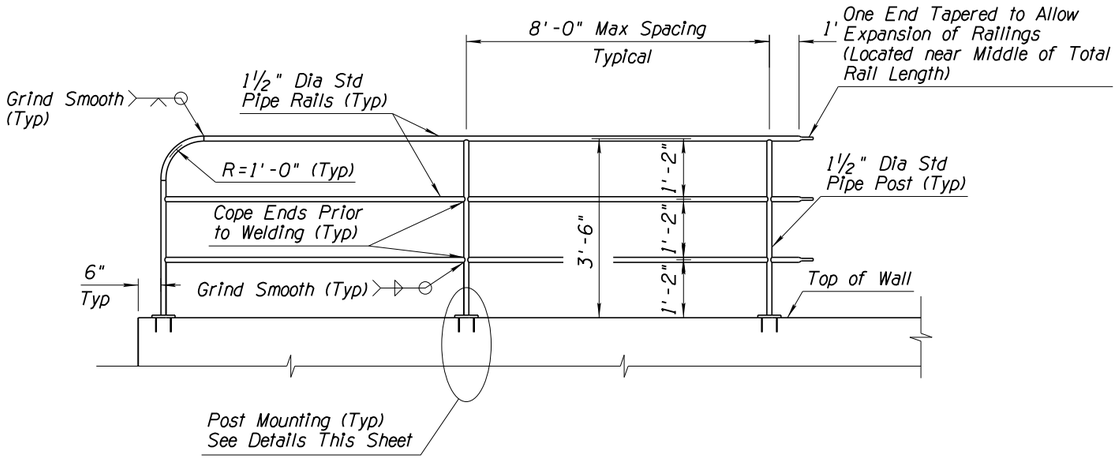

ELEVATION
NTS

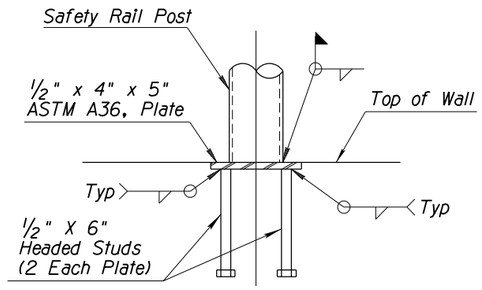

MOUNTING DETAIL OPTION 1
ANCHOR PLATE DETAIL
NTS

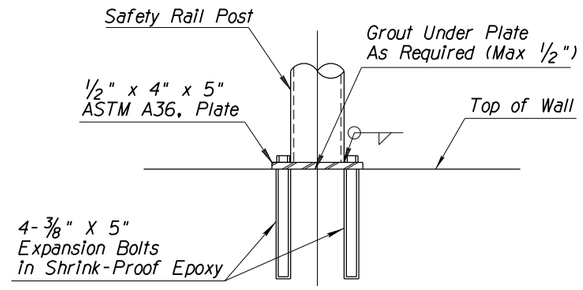

MOUNTING DETAIL OPTION 2
EXPANSION BOLT DETAIL
NTS

NOTES:

1. All welding shall be in accordance with the American Welding Society (AWS) D1.1 using E70xx Electrodes.
2. Posts shall be installed vertically. Railings shall be installed so that they are parallel to the top of wall.
3. Post and Rails shall be 1½" Diameter schedule 40 Hot-Dipped Galvanized Steel Pipe ASTM A53, Grade A (2.72 #/LF, 1.9" O.D.). Galvanizing shall be done in Accordance with ADOT Specification Subsection 604-3.05.
4. Color shall be Approved by the Engineer. Paint Shall Comply with ADOT Specification Subsection 610-3.05 and Section 1002, Unless Specifically Approved Otherwise by the Engineer.

4 SAFETY RAIL
NTS

Contact Arizona 811 at least two full working days before you begin excavation
ARIZONA811
Call 811 or click Arizona811.com

Registered Professional Engineer (Civil) CERTIFICATE NO. 40957 PAUL J. BALCH Date Signed 10/29/20 Not Valid Unless Signature Is Present

DEPARTMENT OF PUBLIC WORKS C I T Y O F T E M P E D I V I S I O N O F E N G I N E E R I N G P.O. BOX 5002 TEMPE, ARIZONA 85280		
SURVEYED: REK DESIGNED: JRH DRAWN: DBB CHECKED: PJB SCALE:	DESCRIPTION McCLINTOCK DRIVE WIDENING IMPROVEMENTS DETAILS	DATE 10/2020 PROJECT NO. 5408751A SHT. 13 OF 44

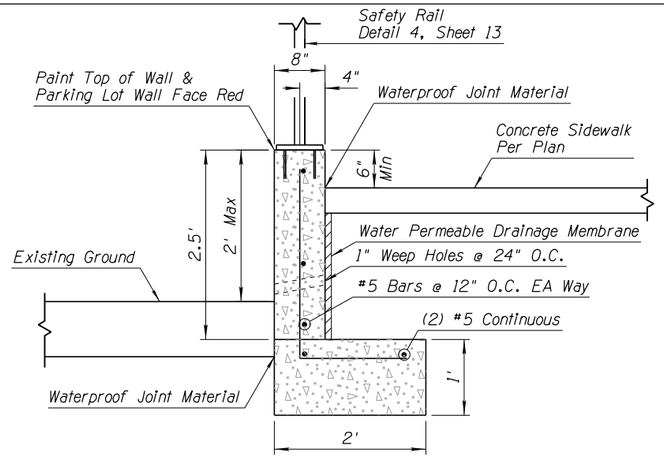

5 RETAINING WALL
NTS

NOTES:
Contractor shall locate existing utilities within the limits of the retaining wall and notify the Engineer of any potential conflicts before construction of the retaining wall.

Limits of Wall:
Station 215+52 to 215+91 Rt

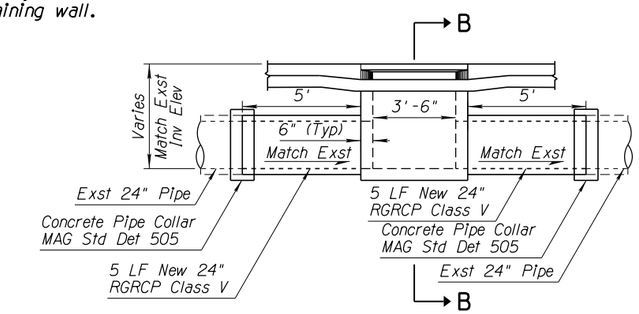

SECTION A-A

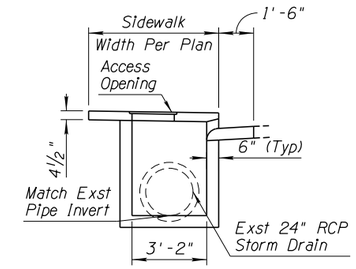

SECTION B-B

NOTES:
See Catch Basin Information Table on This Sheet.

Reinforcing Not Shown for Clarity. Refer to MAG Std Det 530 (Type A) for Information Not Shown.

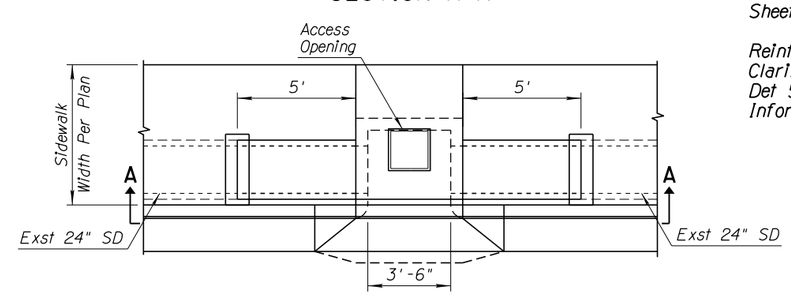

PLAN VIEW

6 CATCH BASIN INLINE WITH STORM DRAIN
MAG STD DET 530 (TYPE A) (MODIFIED)
NTS

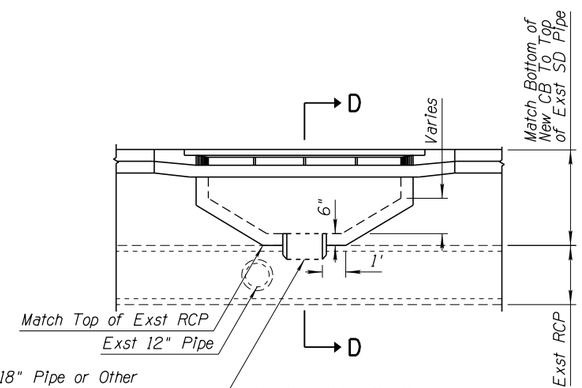

SECTION C-C

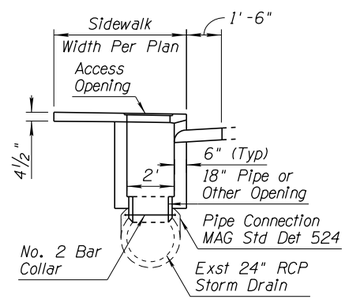

SECTION D-D

NOTES:
See Catch Basin Information Table on This Sheet.

Reinforcing and Access Opening Not Shown for Clarity. Refer to MAG Std Det 532 (Type C) for Information Not Shown.

18" Pipe or Other Opening Approved by the Engineer is Considered Included in the Bid Price for Catch Basin MAG Std Det 532 (Type C) (Modified).

Install 18" Pipe or Other Opening Approved by the Engineer Through New Catch Basin Floor and Top of Existing Pipe. See MAG Std Det 524 for Information Not Shown.

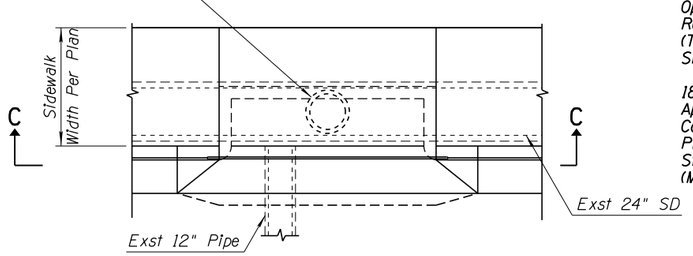

PLAN VIEW

7 CATCH BASIN ABOVE STORM DRAIN
MAG STD DET 532 (TYPE C) (MODIFIED)
NTS

CATCH BASIN INFORMATION

Location	Vertical Clearance*	Std Details for Information Not Shown	Modified Detail (This Sheet)
SWC McClintock & Alameda	2.17'	MAG 530 (Type A)	Det 6
NWC McClintock & Alameda	2.00'	MAG 530 (Type A)	Det 6
SWC McClintock & Palmcroft	4.31'	MAG 532 (Type C)	Det 7
NWC McClintock & El Parque	3.17'	MAG 532 (Type C)	Det 7
SWC McClintock & Broadway	4.17'	MAG 532 (Type C) COT T-354	Det 7**

* Vertical clearance is the distance from top of existing ground to top of existing pipe based on pothole results (Attachment A in Technical Specifications).

** No Exst 12" lateral pipe at this location.

Contact Arizona 811 at least two full working days before you begin excavation
ARIZONA811 BLUE STAKE, INC.
Call 811 or click Arizona811.com

Registered Professional Engineer (Civil) CERTIFICATE NO. 40957 PAUL J. BALCH Date Signed 10/29/20 Arizona U.S.A.

DEPARTMENT OF PUBLIC WORKS
CITY OF TEMPE
DIVISION OF ENGINEERING
P.O. BOX 5002 TEMPE, ARIZONA 85280

SURVEYED: REK	DESCRIPTION	DATE 10/2020
DESIGNED: JRH	McCLINTOCK DRIVE WIDENING IMPROVEMENTS DETAILS	PROJECT NO. 5408751A
DRAWN: DBB		
CHECKED: PJB		
SCALE:		SHT. 14 OF 44

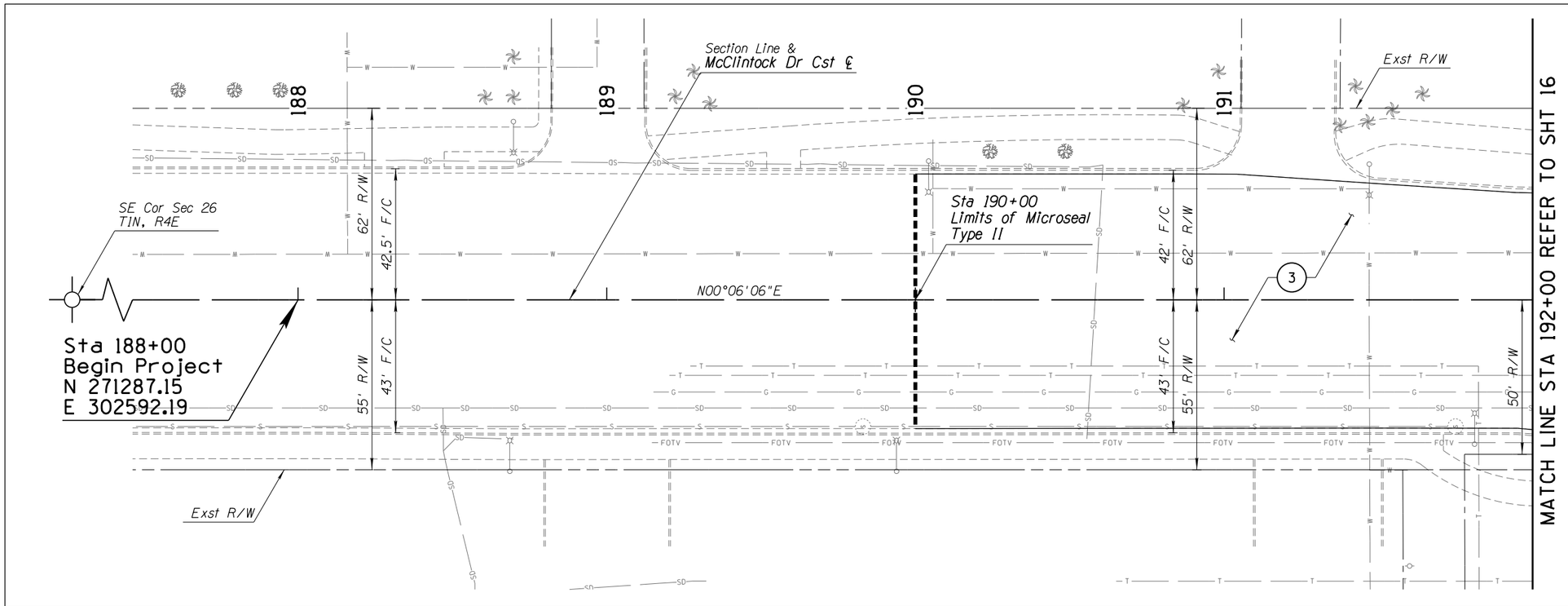

NO EXISTING SURVEY DATA IN THIS AREA

188 189 190 191 192

CONSTRUCTION NOTES

(3) Pavement Section No. 3 — 1795 SY
Microseal Type II

10 0 10 20
Scale in Feet

Contact Arizona 811 at least two full working days before you begin excavation
ARIZONA811
Call 811 or click Arizona811.com

Registered Professional Engineer (Civil)
CERTIFICATE NO. 40957
PAUL J. BALCH
Date Signed 10/29/20
Arizona U.S.A.

DEPARTMENT OF PUBLIC WORKS
CITY OF TEMPE
DIVISION OF ENGINEERING
P.O. BOX 5002 TEMPE, ARIZONA 85280

SURVEYED: REK	DESCRIPTION	DATE 10/2020
DESIGNED: JRH	McCLINTOCK DRIVE WIDENING IMPROVEMENTS PAVING PLAN AND PROFILE	PROJECT NO. 5408751A
DRAWN: DBB		
CHECKED: PJB		
SCALE: 1" = 20'		SHT. 15 OF 44

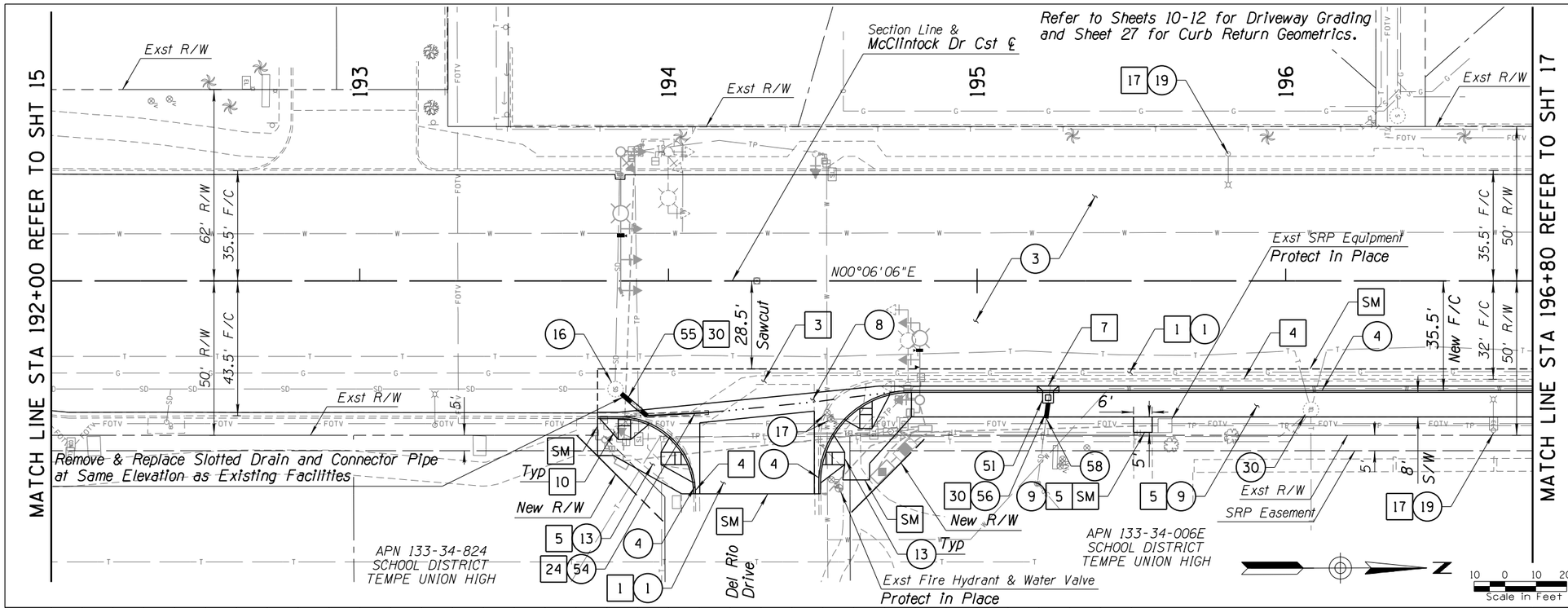

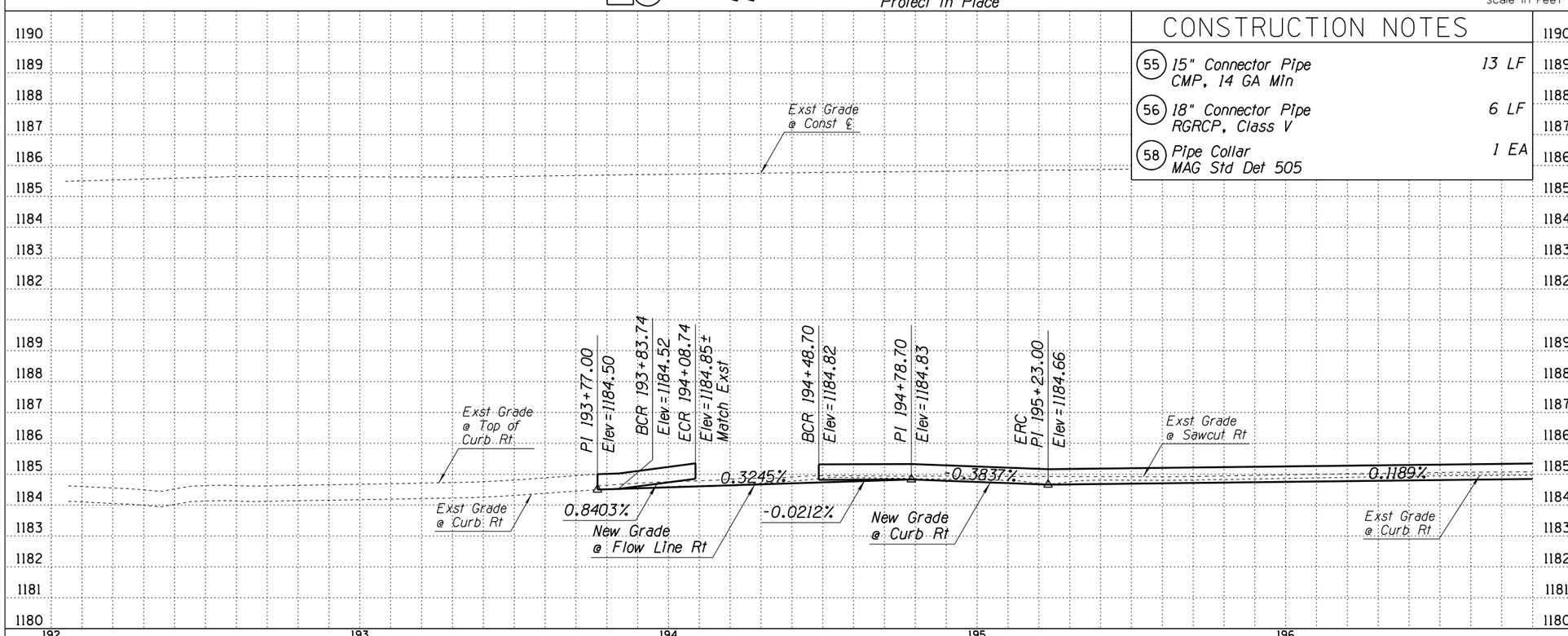

CONSTRUCTION NOTES

SM	Sawcut & Match Exst	317 LF
1	Remove AC Pavement	256 SY
3	Remove Concrete Valley Gutter	383 SF
4	Remove Concrete Curb & Gutter	307 LF
5	Remove Concrete Sidewalk	3125 SF
7	Remove Catch Basin	1 EA
10	Remove Traffic Signal Pole Refer to Signal Sheets	
17	Remove Light Fixture	2 EA
24	Remove Slotted Drain	1 EA
30	Remove Pipe	26 LF
1	Pavement Section No. 1 Microseal Type II 2" AC (R-1/2") 4" AC (A-3/4") 14" ABC, Tack Coat Subgrade Preparation	337 SY
3	Pavement Section No. 3 Microseal Type II	4019 SY
4	Concrete Curb & Gutter MAG Std Det 220-1, Type A	298 LF
8	Concrete Valley Gutter MAG Std Det 240	724 SF
9	Concrete Sidewalk MAG Std Det 230	1717 SF
13	Concrete Sidewalk Ramp MAG Std Det 237-1	4 EA
16	Adjust Manhole Frame & Cover COT Std Det T-446	1 EA
17	Adjust Valve Frame & Cover COT Std Det T-445	2 EA
19	LED Light Fixture ERS1 013E140ABLCKRL	2 EA
30	Adjust Manhole Frame & Cover (By Others)	
51	Concrete Catch Basin MAG Std Det 530, Type A	1 EA
54	Slotted Drain COT Std Det T-354	20 LF

CONSTRUCTION NOTES

55	15" Connector Pipe CMP, 14 GA Min	13 LF
56	18" Connector Pipe RGRCP, Class V	6 LF
58	Pipe Collar MAG Std Det 505	1 EA

Contact Arizona 811 at least two full working days before you begin excavation
ARIZONA811 BLUE STAKE, INC.
Call 811 or click Arizona811.com

Registered Professional Engineer (Civil) CERTIFICATE NO. 40957 PAUL J. BALCH Date Signed 10/29/20 Arizona U.S.A.

DEPARTMENT OF PUBLIC WORKS
CITY OF TEMPE
DIVISION OF ENGINEERING
P.O. BOX 5002 TEMPE, ARIZONA 85280

SURVEYED: REK
DESIGNED: JRH
DRAWN: DBB
CHECKED: PJB
SCALE: 1"= 20' HORIZ
1" = 2' VERT

DESCRIPTION
McCLINTOCK DRIVE
WIDENING IMPROVEMENTS
PAVING PLAN AND PROFILE

DATE 10/2020
PROJECT NO. 5408751A
SHT. 16 OF 44

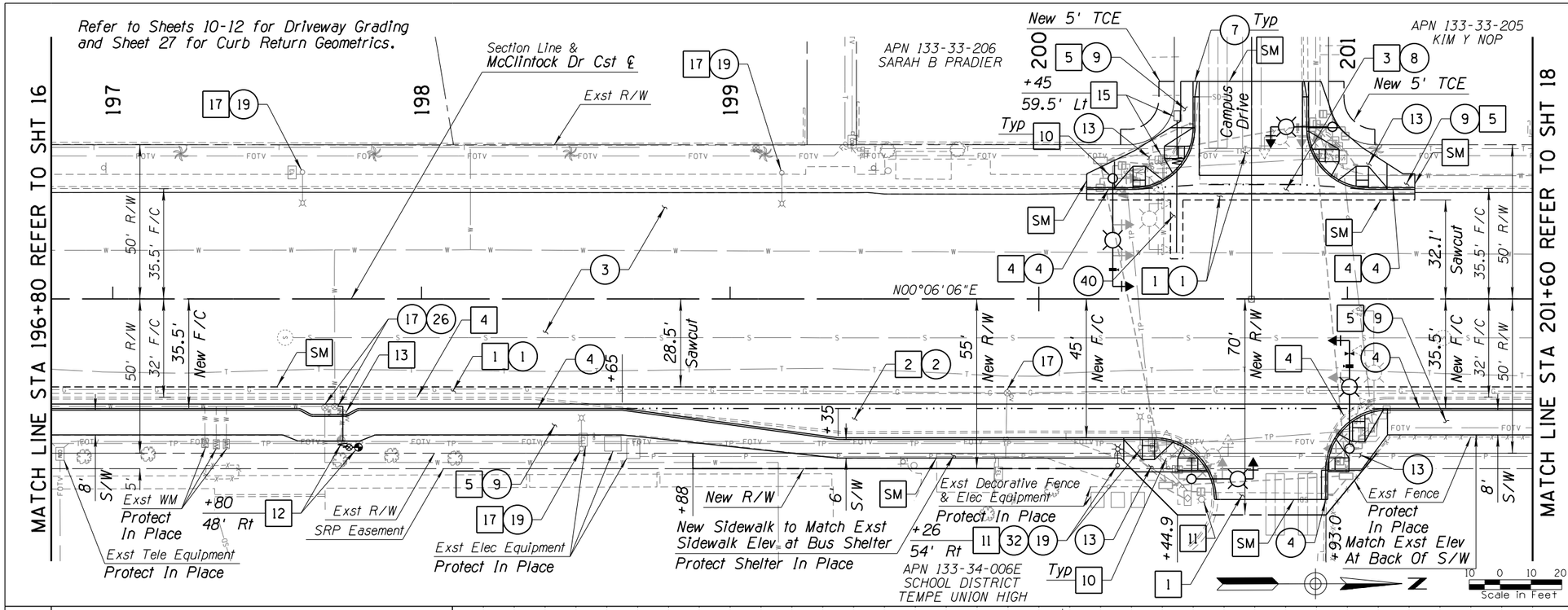

CONSTRUCTION NOTES

SM	Sawcut & Match Exst	628 LF
1	Remove AC Pavement	283 SY
2	Remove PCC Pavement	391 SY
3	Remove Concrete Valley Gutter	377 SF
4	Remove Concrete Curb & Gutter	605 LF
5	Remove Concrete Sidewalk	5142 LF
10	Remove Traffic Signal Pole Refer to Signal Sheets	
11	Remove & Salvage Street Light Pole	2 EA
12	Remove & Replace Fire Hydrant Plug Exst Pipe, MAG Std Det 360-1, 360-2 & 362, Pavement Marker, MAG 122 & ADOT M-19 Type "BB"	1 EA
13	Remove Water Valve	1 EA
15	Remove & Replace Water Meter And Water Service Line COT Std Det T-212 & T-212A	1 EA
17	Remove Light Fixture	3 EA
1	Pavement Section No. 1 Microseal Type II 2" AC (R-1/2") 4" AC (A-3/4") 14" ABC, Tack Coat Subgrade Preparation	434 SY
2	Pavement Section No. 2 8" PCCP 4" ABC Subgrade Preparation	341 SY
3	Pavement Section No. 3 Microseal Type II	3763 SY
4	Concrete Curb & Gutter MAG Std Det 220-1, Type A	590 LF
7	Concrete Curb & Gutter Transition MAG Std Det 221	10 LF
8	Concrete Valley Gutter MAG Std Det 240	490 SF
9	Concrete Sidewalk MAG Std Det 230	3162 SF
13	Concrete Sidewalk Ramp MAG Std Det 237-1	8 EA
17	Adjust Valve Frame & Cover COT Std Det T-445	3 EA
19	LED Light Fixture ERS1 013E140ABLCKRL	4 EA
26	Curb Offset Detail 3, Sheet 7	

CONSTRUCTION NOTES

32	Streamline Steel Pole, Mast Arm & Foundation, COT Std Det T-651	1 EA
40	Trench Backfill & Surface Replacement, COT Std Det T-450	9 SY

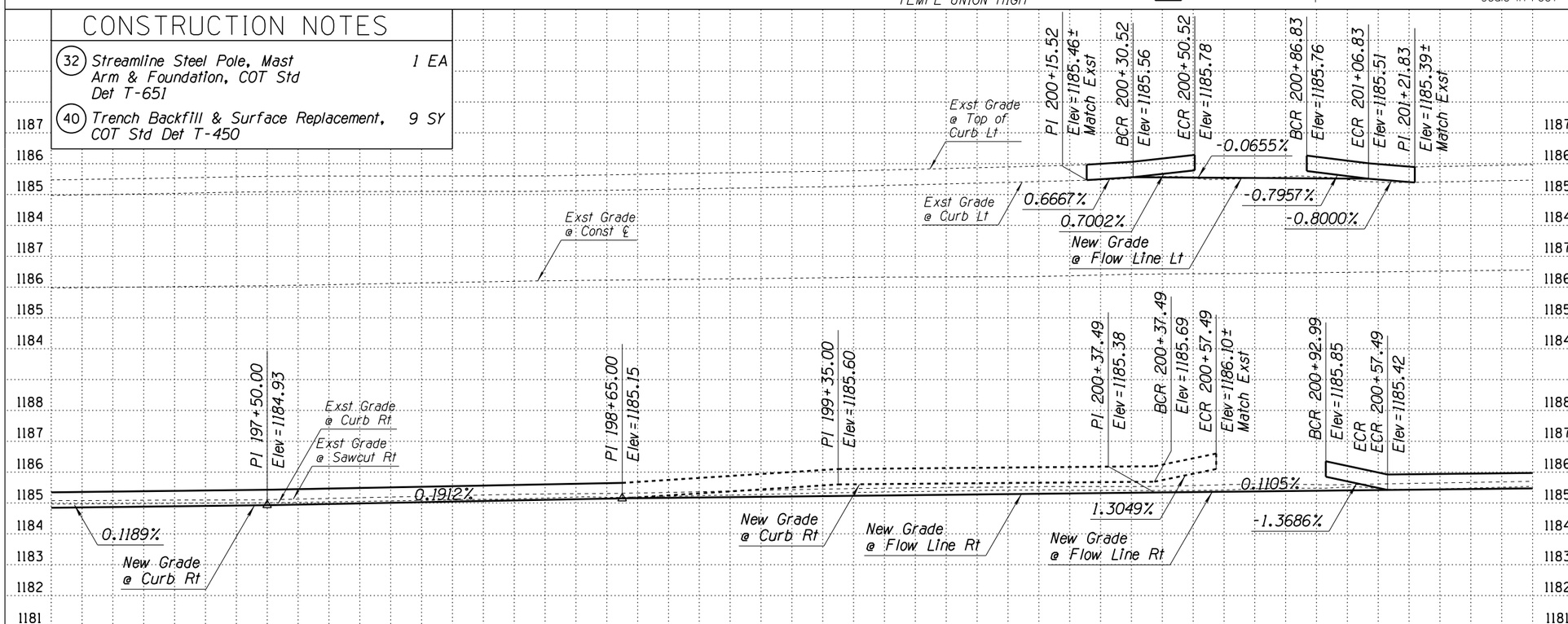

Contact Arizona 811 at least two full working days before you begin excavation
ARIZONA811 Call 811 or click Arizona811.com

Registered Professional Engineer (Civil) CERTIFICATE NO. 40957 PAUL J. BALCH Date Signed 10/29/20 Arizona U.S.A.

DEPARTMENT OF PUBLIC WORKS
CITY OF TEMPE
DIVISION OF ENGINEERING
P.O. BOX 5002 TEMPE, ARIZONA 85280

SURVEYED: REK	DESCRIPTION	DATE 10/2020
DESIGNED: JRH	McCLINTOCK DRIVE WIDENING IMPROVEMENTS PAVING PLAN AND PROFILE	PROJECT NO. 5408751A
DRAWN: DBB		
CHECKED: PJB		
SCALE: 1"= 20' HORIZ 1"= 2' VERT		SHT. 17 OF 44

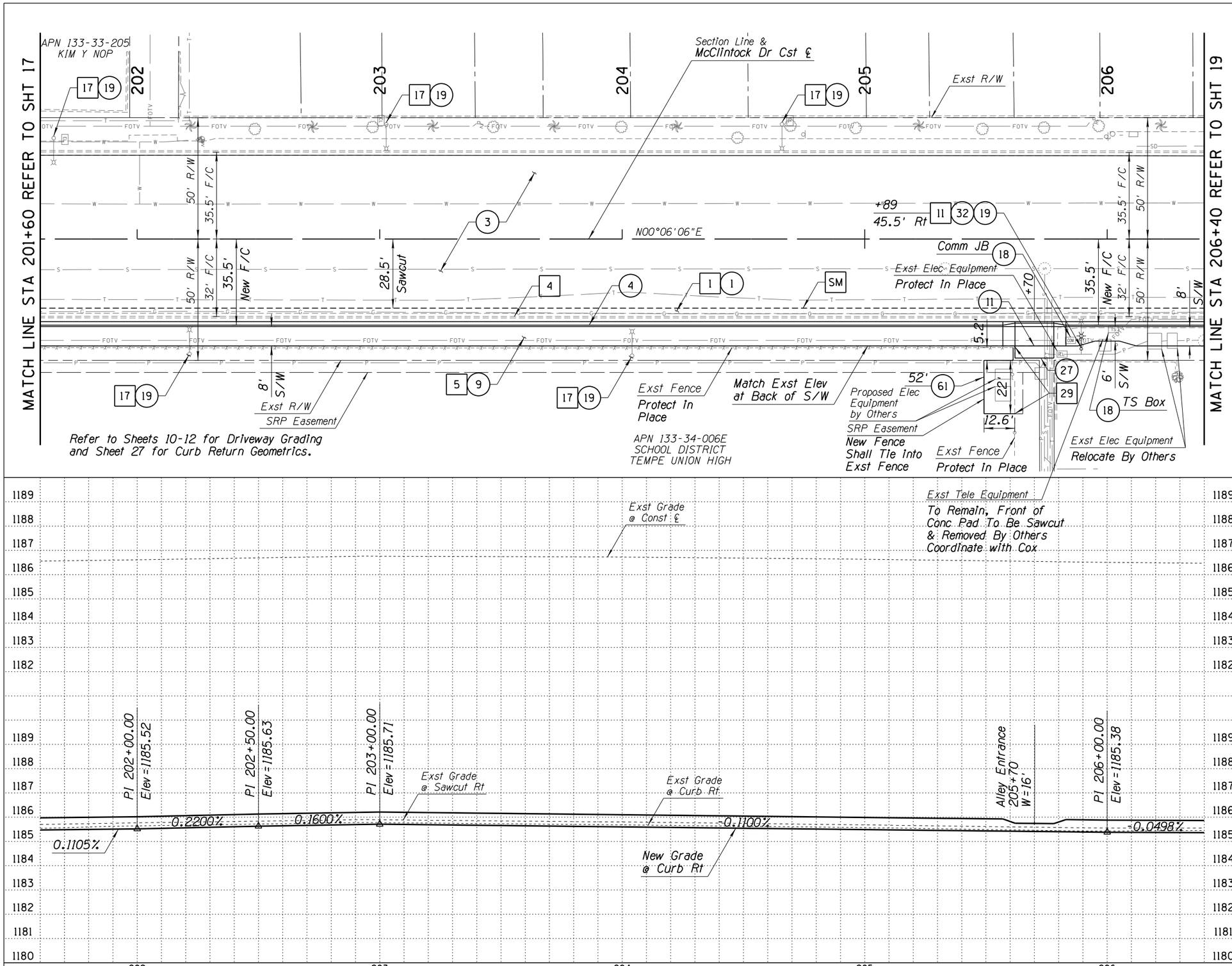

CONSTRUCTION NOTES

SM	Sawcut & Match Exst	480 LF
1	Remove AC Pavement	118 SY
4	Remove Concrete Curb & Gutter	480 LF
5	Remove Concrete Sidewalk	5110 SF
11	Remove & Salvage Street Light Pole	1 EA
17	Remove Light Fixture	5 EA
29	Remove Chain Link Fence	31 LF
1	Pavement Section No. 1 Microseal Type II 2" AC (R-1/2") 4" AC (A-3/4") 14" ABC, Tack Coat Subgrade Preparation	298 SY
3	Pavement Section No. 3 Microseal Type II	3654 SY
4	Concrete Curb & Gutter MAG Std Det 220-1, Type A	454 LF
9	Concrete Sidewalk MAG Std Det 230	3632 SF
11	Concrete Alley Entrance MAG Std Det 260	260 SF
18	Adjust Meter Box, Junction Box or Pull Box To Grade	2 EA
19	LED Light Fixture ERS1 013E140ABLCKRL	6 EA
27	Pavement Section No. 5 AC Driveway Tie-In 3" AC (R-1/2"), 6" ABC	9 SY
32	Streamline Steel Pole, Mast Arm & Foundation, COT Std Det T-651	1 EA
61	Chain Link Fence (H=72") ADOT Std C-12.20 (Type I)	52 LF

N

10 0 10 20
Scale in Feet

Contact Arizona 811 at least two full working days before you begin excavation
ARIZONA811 BLUE STAKE, INC.
Call 811 or click Arizona811.com

Registered Professional Engineer (Civil)
CERTIFICATE NO. 40957
PAUL J. BALCH
Date Signed 10/29/20
Arizona U.S.A.

DEPARTMENT OF PUBLIC WORKS

CITY OF TEMPE
DIVISION OF ENGINEERING
P.O. BOX 5002 TEMPE, ARIZONA 85280

SURVEYED: REK	DESCRIPTION	DATE 10/2020
DESIGNED: JRH	McCLINTOCK DRIVE WIDENING IMPROVEMENTS PAVING PLAN AND PROFILE	PROJECT NO. 5408751A
DRAWN: DBB		
CHECKED: PJB		
SCALE: 1"= 20' HORIZ 1"= 2' VERT		SHT. 18 OF 44

10/29/2020 J:\2015\1015020.08 MCCLINTOCK DRIVE WIDENING IMPROVEMENTS\CAD_SOUTH\15020_08-P04.DGN

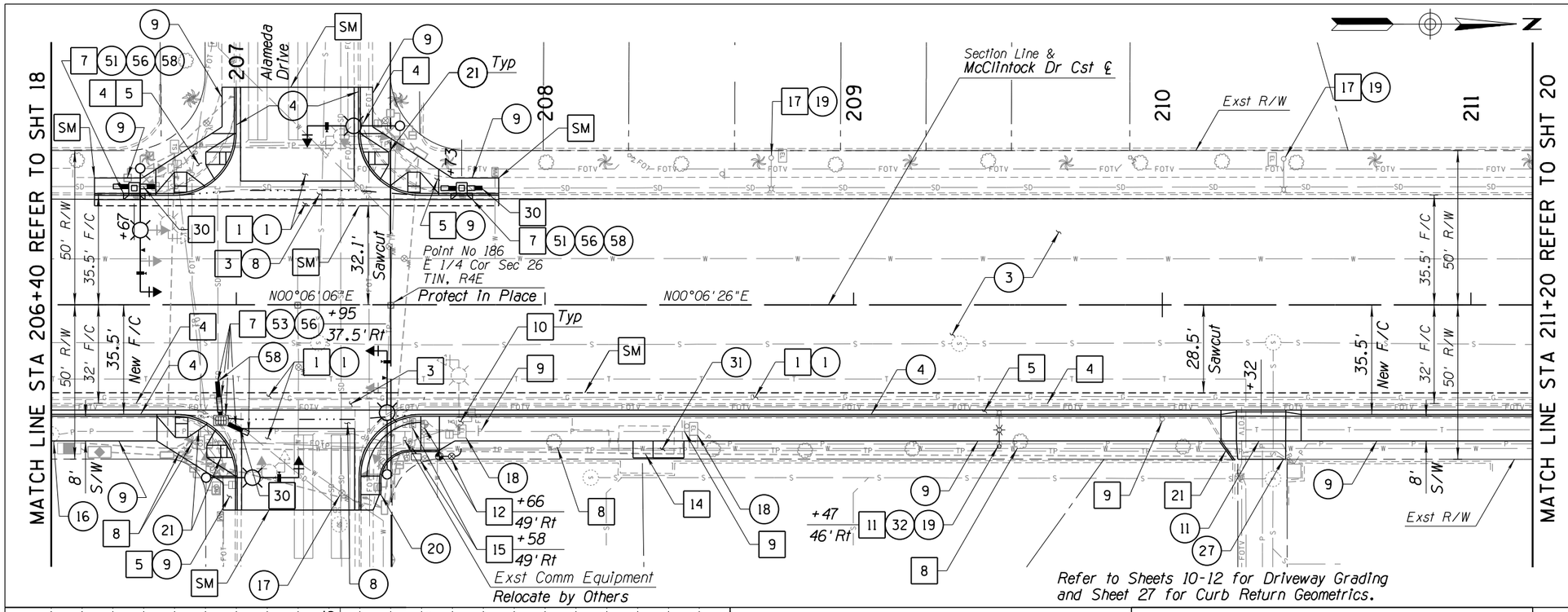

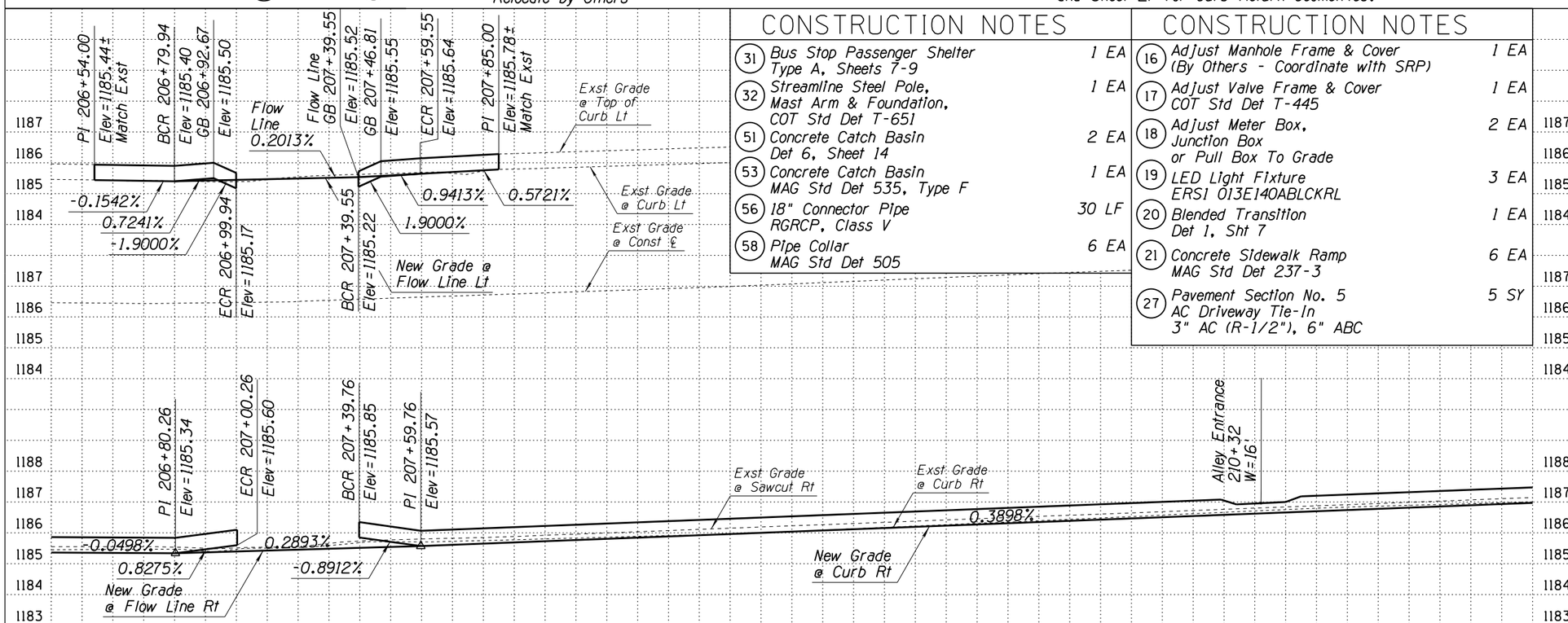

CONSTRUCTION NOTES

SM	Sawcut & Match Exst	616 LF
1	Remove AC Pavement	421 SY
3	Remove Concrete Valley Gutter	997 SF
4	Remove Concrete Curb & Gutter	619 LF
5	Remove Concrete Sidewalk	2640 SF
7	Remove Catch Basin	3 EA
8	Remove Tree Greater Than 12" Diameter	4 EA
9	Relocate Sign w/New Post & Base Refer to Signing & Marking Sheets	
10	Remove Traffic Signal Pole Refer to Signal Sheets	
11	Remove & Salvage Street Light Pole	1 EA
12	Remove & Replace Fire Hydrant Plug Exst Pipe, MAG Std Det 360-1, 360-2 & 362, Pavement Marker, MAG 122 & ADOT M-19 Type "BB"	1 EA
14	Remove Bus Stop Conc Pad & Shelter	1 EA
15	Remove & Replace Water Meter And Water Service Line COT Std Det T-212 & T-212A	1 EA
17	Remove Light Fixture	2 EA
21	Remove & Replace Header Curb	8 LF
30	Remove Pipe	44 LF
1	Pavement Section No. 1 Microseal Type II 2" AC (R-1/2") 4" AC (A-3/4") 14" ABC, Tack Coat Subgrade Preparation	559 SY
3	Pavement Section No. 3 Microseal Type II	3885 SY
4	Concrete Curb & Gutter MAG Std Det 220-1, Type A	604 LF
8	Concrete Valley Gutter MAG Std Det 240	1019 SF
9	Concrete Sidewalk MAG Std Det 230	3278 SF
11	Concrete Alley Entrance MAG Std Det 260	260 SF

CONSTRUCTION NOTES

31	Bus Stop Passenger Shelter Type A, Sheets 7-9	1 EA
32	Streamline Steel Pole, Mast Arm & Foundation, COT Std Det T-651	1 EA
51	Concrete Catch Basin Det 6, Sheet 14	2 EA
53	Concrete Catch Basin MAG Std Det 535, Type F	1 EA
56	18" Connector Pipe RGRCP, Class V	30 LF
58	Pipe Collar MAG Std Det 505	6 EA

CONSTRUCTION NOTES

16	Adjust Manhole Frame & Cover (By Others - Coordinate with SRP)	1 EA
17	Adjust Valve Frame & Cover COT Std Det T-445	1 EA
18	Adjust Meter Box, Junction Box or Pull Box To Grade	2 EA
19	LED Light Fixture ERS1 013E140ABLCKRL	3 EA
20	Blended Transition Det 1, Sht 7	1 EA
21	Concrete Sidewalk Ramp MAG Std Det 237-3	6 EA
27	Pavement Section No. 5 AC Driveway Tie-In 3" AC (R-1/2"), 6" ABC	5 SY

10 0 10 20
Scale In Feet

Contact Arizona 811 at least two full working days before you begin excavation
ARIZONA811
Call 811 or click Arizona811.com

Registered Professional Engineer (Civil) CERTIFICATE NO. 40957 PAUL J. BALCH Date Signed 10/29/20 Arizona, U.S.A.

DEPARTMENT OF PUBLIC WORKS
C I T Y O F T E M P E
D I V I S I O N O F E N G I N E E R I N G
P.O. BOX 5002 TEMPE, ARIZONA 85280

SURVEYED: REK	DESCRIPTION	DATE 10/2020
DESIGNED: JRH	McCLINTOCK DRIVE WIDENING IMPROVEMENTS PAVING PLAN AND PROFILE	PROJECT NO. 5408751A
DRAWN: DBB		
CHECKED: PJB		
SCALE: 1"= 20' HORIZ 1"= 2' VERT		SHT. 19 OF 44

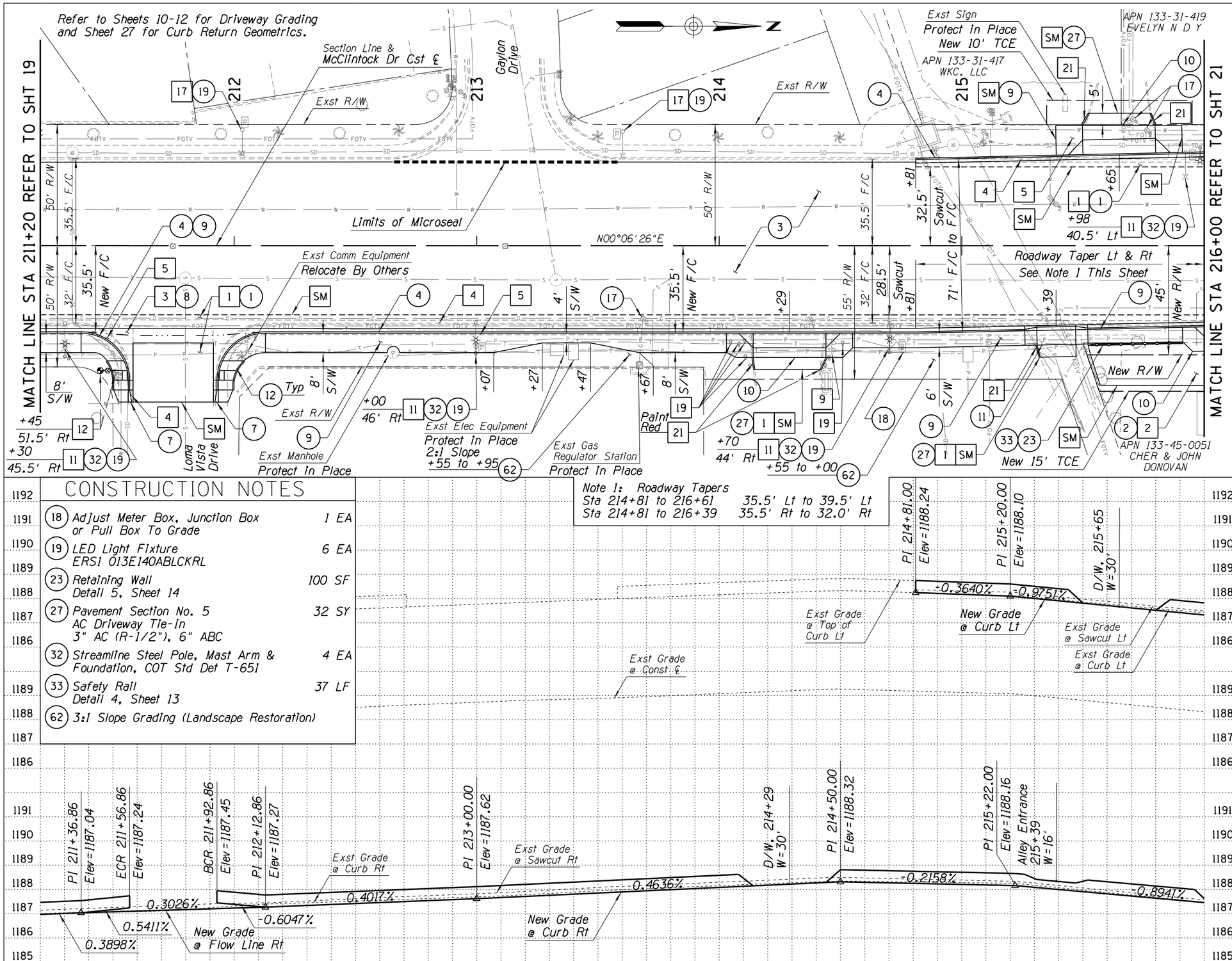

CONSTRUCTION NOTES

SM	Sawcut & Match Exst	601 LF
1	Remove AC Pavement	261 SY
2	Remove PCC Pavement	83 SY
3	Remove Concrete Valley Gutter	296 SF
4	Remove Concrete Curb & Gutter	611 LF
5	Remove Concrete Sidewalk	2650 SF
8	Remove Tree Greater Than 12" Diameter	1 EA
9	Relocate Sign w/New Post & Base Refer to Signing & Marking Sheets	
11	Remove & Salvage Street Light Pole	4 EA
12	Remove & Replace Fire Hydrant Plug Exst Pipe, MAG Std Det 360-1, 360-2 & 362, Pavement Marker, MAG 122 & ADOT M-19 Type "BB"	1 EA
17	Remove Light Fixture	2 EA
19	Remove Cactus (Landscape Restoration)	5 EA
21	Remove & Replace Header Curb	16 LF
1	Pavement Section No. 1 Microseal Type II 2" AC (R-1/2"), 4" AC (A-3/4") 14" ABC, Tack Coat Subgrade Preparation	409 SY
2	Pavement Section No. 2 8" PCCP, 4" ABC Subgrade Preparation	83 SY
3	Pavement Section No. 3 Microseal Type II	3743 SY
4	Concrete Curb & Gutter MAG Std Det 220-1, Type A	578 LF
7	Concrete Curb & Gutter Transition MAG Std Det 221	10 LF
8	Concrete Valley Gutter MAG Std Det 240	488 SF
9	Concrete Sidewalk MAG Std Det 230	2695 SF
10	Concrete Driveway COT Std Det T-320	733 SF
11	Concrete Alley Entrance MAG Std Det 260	208 SF
12	Concrete Sidewalk Ramp COT Std Det T-326	2 EA
17	Adjust Valve Frame & Cover COT Std Det T-445	3 EA

CONSTRUCTION NOTES

18	Adjust Meter Box, Junction Box or Pull Box To Grade	1 EA
19	LED Light Fixture ERS1 013E140ABLCKRL	6 EA
23	Retaining Wall Detail 5, Sheet 14	100 SF
27	Pavement Section No. 5 AC Driveway Tie-In 3" AC (R-1/2"), 6" ABC	32 SY
32	Streamline Steel Pole, Mast Arm & Foundation, COT Std Det T-651	4 EA
33	Safety Rail Detail 4, Sheet 13	37 LF
62	3:1 Slope Grading (Landscape Restoration)	

Scale In Feet: 10 0 10 20

Contact Arizona 811 at least two full working days before you begin excavation. ARIZONA811 Call 811 or click Arizona811.com

Registered Professional Engineer (Civil) CERTIFICATE NO. 40957 PAUL J. BALCH Date Signed 10/29/20 Arizona U.S.A.

DEPARTMENT OF PUBLIC WORKS

CITY OF TEMPE
DIVISION OF ENGINEERING
P.O. BOX 5002 TEMPE, ARIZONA 85280

SURVEYED: REK	DESCRIPTION	DATE 10/2020
DESIGNED: JRH	McCLINTOCK DRIVE WIDENING IMPROVEMENTS PAVING PLAN AND PROFILE	PROJECT NO. 5408751A
DRAWN: DBB		
CHECKED: PJB		
SCALE: 1"= 20' HORIZ 1"= 2' VERT		SHT. 20 OF 44

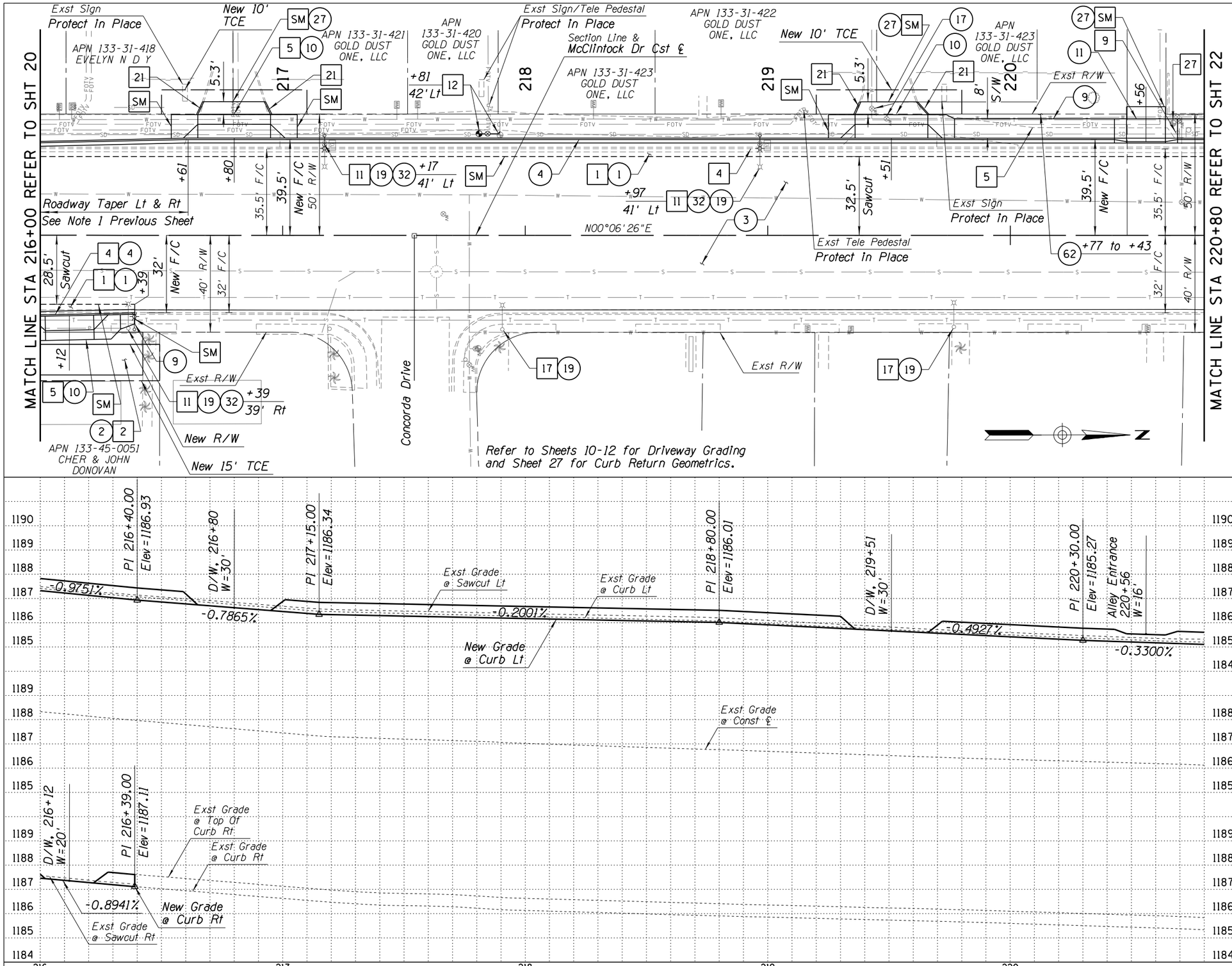

CONSTRUCTION NOTES

SM	Sawcut & Match Exst	521 LF
1	Remove AC Pavement	112 SY
2	Remove PCC Pavement	73 SY
4	Remove Concrete Curb & Gutter	519 LF
5	Remove Concrete Sidewalk	2452 SF
9	Relocate Sign w/New Post & Base Refer to Signing & Marking Sheets	
11	Remove & Salvage Street Light Pole	3 EA
12	Remove & Replace Fire Hydrant Plug Exst Pipe, MAG Std Det 360-1, 360-2 & 362, Pavement Marker, MAG 122 & ADOT M-19 Type "BB"	1 EA
17	Remove Light Fixture	2 EA
21	Remove & Replace Header Curb	25 LF
27	Remove Fire Hydrant Plug Exst Pipe	1 EA
1	Pavement Section No. 1 Microseal Type II 2" AC (R-1/2"), 4" AC (A-3/4") 14" ABC, Tack Coat Subgrade Preparation	304 SY
2	Pavement Section No. 2 8" PCCP, 4" ABC Subgrade Preparation	73 SY
3	Pavement Section No. 3 Microseal Type II	3666 SY
4	Concrete Curb & Gutter MAG Std Det 220-1, Type A	493 LF
9	Concrete Sidewalk MAG Std Det 230	1116 SF
10	Concrete Driveway COT Std Det T-320	879 SF
11	Concrete Alley Entrance MAG Std Det 260	260 SF
17	Adjust Valve Frame & Cover COT Std Det T-445	1 EA
19	LED Light Fixture ERS1 013E140ABLCKRL	5 EA
27	Pavement Section No. 5 AC Driveway Tie-In 3" AC (R-1/2"), 6" ABC	33 SY
32	Streamline Steel Pole, Mast Arm & Foundation, COT Std Det T-651	3 EA
62	3:1 Slope Grading (Landscape Restoration)	

10 0 10 20
Scale In Feet

Contact Arizona 811 at least two full working days before you begin excavation
ARIZONA811
Call 811 or click Arizona811.com

Registered Professional Engineer (Civil)
CERTIFICATE NO. 40957
PAUL J. BALCH
Date Signed 10/29/20
Arizona U.S.A.

DEPARTMENT OF PUBLIC WORKS
CITY OF TEMPE
DIVISION OF ENGINEERING
P.O. BOX 5002 TEMPE, ARIZONA 85280

SURVEYED: REK
DESIGNED: JRH
DRAWN: DBB
CHECKED: PJB
SCALE: 1"= 20' HORIZ
1"= 2' VERT

DESCRIPTION
McCLINTOCK DRIVE
WIDENING IMPROVEMENTS
PAVING PLAN AND PROFILE

DATE 10/2020
PROJECT NO.
5408751A
SHT. 21 OF 44

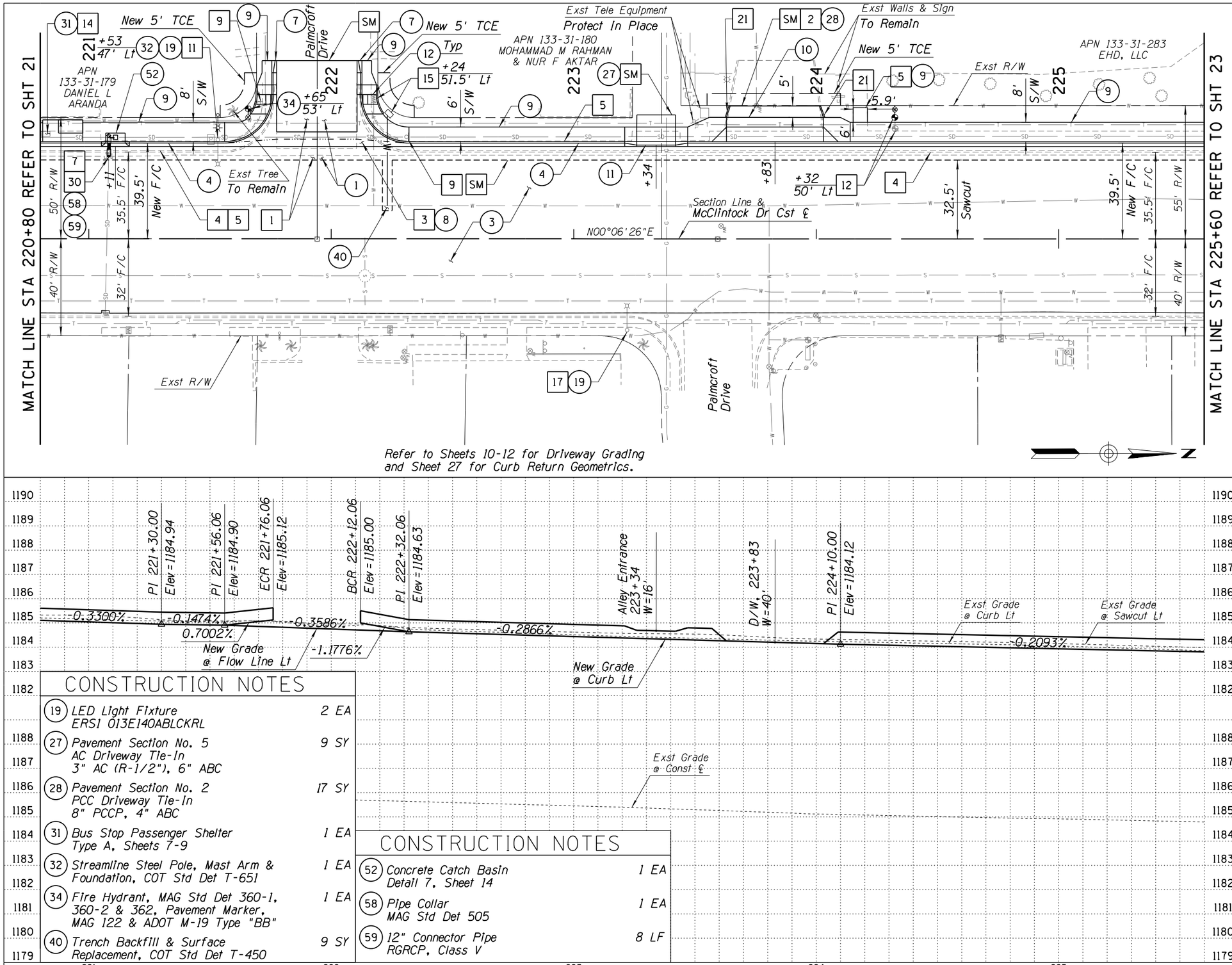

CONSTRUCTION NOTES

SM	Sawcut & Match Exst	522 LF
1	Remove AC Pavement	245 SY
2	Remove PCC Pavement	17 SY
3	Remove Concrete Valley Gutter	289 SF
4	Remove Concrete Curb & Gutter	503 LF
5	Remove Concrete Sidewalk	2934 SF
7	Remove Catch Basin	1 EA
9	Relocate Sign w/New Post & Base Refer to Signing & Marking Sheets	
11	Remove & Salvage Street Light Pole	1 EA
12	Remove & Replace Fire Hydrant Plug Exst Pipe, MAG Std Det 360-1, 360-2 & 362, Pavement Marker, MAG 122 & ADOT M-19 Type "BB"	1 EA
14	Remove Bus Stop Conc Pad & Furniture	1 EA
15	Remove & Replace Water Meter And Water Service Line COT Std Det T-212 & T-212A	1 EA
17	Remove Light Fixture	1 EA
21	Remove & Replace Header Curb	10 LF
30	Remove Pipe	8 LF
1	Pavement Section No. 1 Microseal Type II 2" AC (R-1/2"), 4" AC (A-3/4") 14" ABC, Tack Coat Subgrade Preparation	406 SY
3	Pavement Section No. 3 Microseal Type II	3768 SY
4	Concrete Curb & Gutter MAG Std Det 220-1, Type A	454 LF
7	Concrete Curb & Gutter Transition MAG Std Det 221	10 LF
8	Concrete Valley Gutter MAG Std Det 240	488 SF
9	Concrete Sidewalk MAG Std Det 230	2039 SF
10	Concrete Driveway COT Std Det T-320	436 SF
11	Concrete Alley Entrance MAG Std Det 260	208 SF
12	Concrete Sidewalk Ramp COT Std Det T-326	2 EA

CONSTRUCTION NOTES

19	LED Light Fixture ERS1 013E140ABLCKRL	2 EA
27	Pavement Section No. 5 AC Driveway Tie-In 3" AC (R-1/2"), 6" ABC	9 SY
28	Pavement Section No. 2 PCC Driveway Tie-In 8" PCCP, 4" ABC	17 SY
31	Bus Stop Passenger Shelter Type A, Sheets 7-9	1 EA
32	Streamline Steel Pole, Mast Arm & Foundation, COT Std Det T-651	1 EA
34	Fire Hydrant, MAG Std Det 360-1, 360-2 & 362, Pavement Marker, MAG 122 & ADOT M-19 Type "BB"	1 EA
40	Trench Backfill & Surface Replacement, COT Std Det T-450	9 SY

CONSTRUCTION NOTES

52	Concrete Catch Basin Detail 7, Sheet 14	1 EA
58	Pipe Collar MAG Std Det 505	1 EA
59	12" Connector Pipe RGRCP, Class V	8 LF

10 0 10 20
Scale in Feet

Contact Arizona 811 at least two full working days before you begin excavation
ARIZONA811 BLUE STAKE, INC.
Call 811 or click Arizona811.com

Registered Professional Engineer (Civil) CERTIFICATE NO. 40957 PAUL J. BALCH Date Signed 10/29/20 Arizona U.S.A.

DEPARTMENT OF PUBLIC WORKS
CITY OF TEMPE
DIVISION OF ENGINEERING
P.O. BOX 5002 TEMPE, ARIZONA 85280

SURVEYED: REK	DESCRIPTION	DATE 10/2020	
DESIGNED: JRH	McCLINTOCK DRIVE WIDENING IMPROVEMENTS PAVING PLAN AND PROFILE	PROJECT NO. 5408751A	
DRAWN: DBB			
CHECKED: PJB			
SCALE: 1"= 20' HORIZ 1"= 2' VERT		SHT. 22 OF 44	

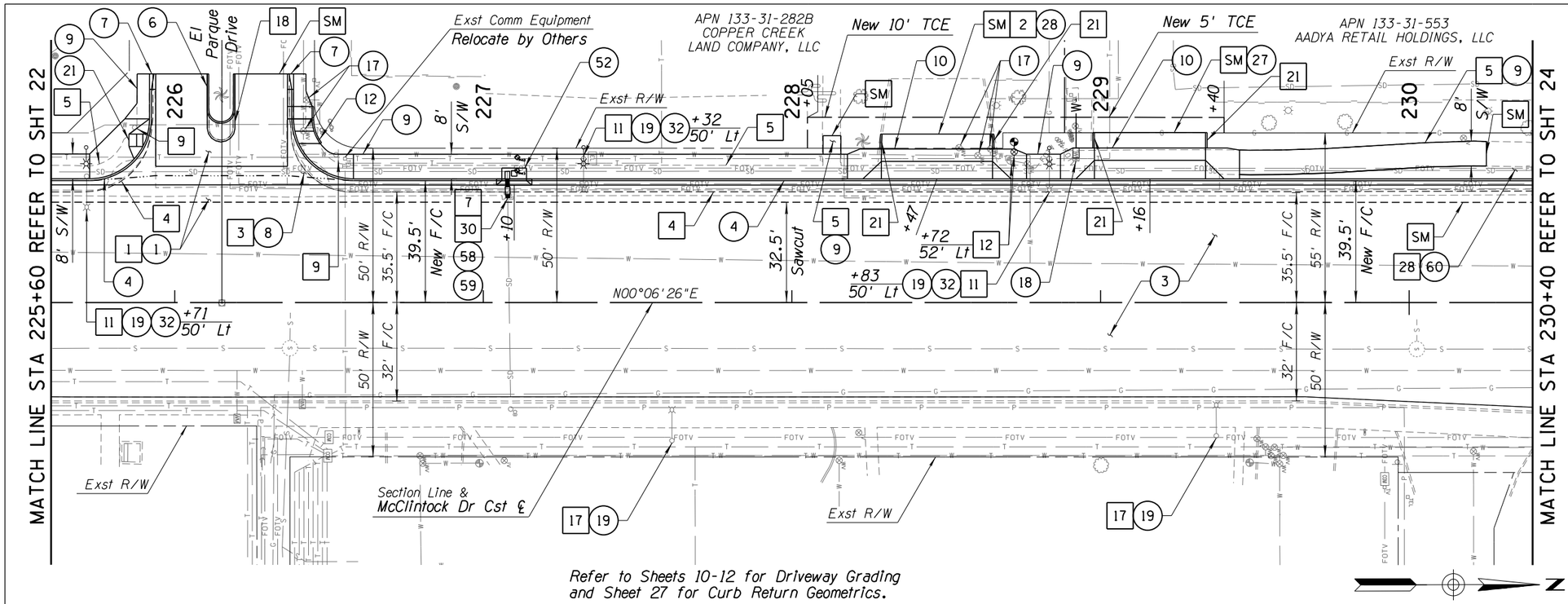

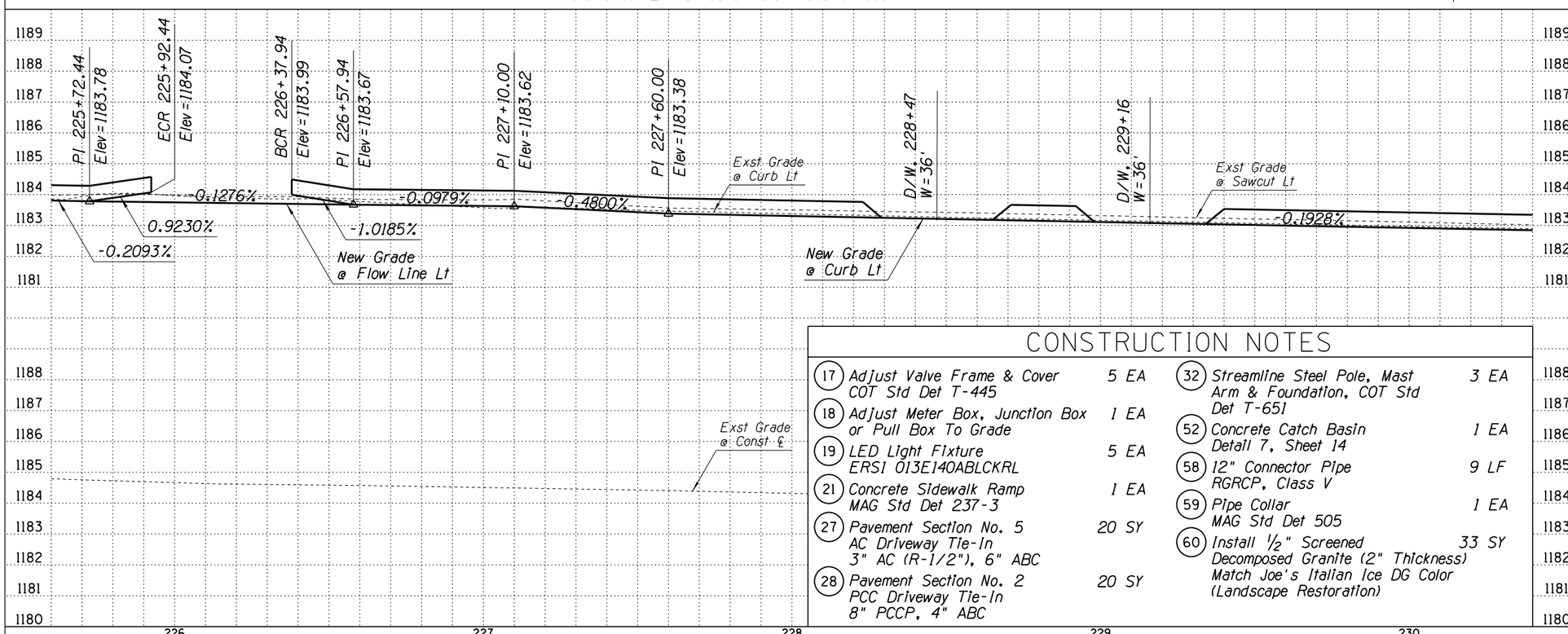

CONSTRUCTION NOTES

SM	Sawcut & Match Exst	480 LF
1	Remove AC Pavement	264 SY
2	Remove PCC Pavement	20 SY
3	Remove Concrete Valley Gutter	326 SF
4	Remove Concrete Curb & Gutter	493 LF
5	Remove Concrete Sidewalk	3749 SF
7	Remove Catch Basin	1 EA
9	Relocate Sign w/New Post & Base Refer to Signing & Marking Sheets	
11	Remove & Salvage Street Light Pole	3 EA
12	Remove & Replace Fire Hydrant Plug Exst Pipe, MAG Std Det 360-1, 360-2 & 362, Pavement Marker, MAG 122 & ADOT M-19 Type "BB"	1 EA
17	Remove Light Fixture	2 EA
18	Remove Single Curb	49 LF
21	Remove & Replace Header Curb	20 LF
28	Remove Landscape Rock (Landscape Restoration)	71 SY
30	Remove Pipe	9 LF
1	Pavement Section No. 1 Microseal Type II 2" AC (R-1/2") 4" AC (A-3/4") 14" ABC, Tack Coat Subgrade Preparation	425 SY
3	Pavement Section No. 3 Microseal Type II	3801 SY
4	Concrete Curb & Gutter MAG Std Det 220-1, Type A	476 LF
6	Concrete Single Curb MAG Std Det 222, Type B	37 LF
7	Concrete Curb & Gutter Transition MAG Std Det 221	10 LF
8	Concrete Valley Gutter MAG Std Det 240	545 SF
9	Concrete Sidewalk MAG Std Det 230	2661 SF
10	Concrete Driveway COT Std Det T-320	778 SF
12	Concrete Sidewalk Ramp COT Std Det T-326	1 EA

CONSTRUCTION NOTES

17	Adjust Valve Frame & Cover COT Std Det T-445	5 EA
18	Adjust Meter Box, Junction Box or Pull Box To Grade	1 EA
19	LED Light Fixture ERS1 013E140ABLCKRL	5 EA
21	Concrete Sidewalk Ramp MAG Std Det 237-3	1 EA
27	Pavement Section No. 5 AC Driveway Tie-In 3" AC (R-1/2"), 6" ABC	20 SY
28	Pavement Section No. 2 PCC Driveway Tie-In 8" PCCP, 4" ABC	20 SY
32	Streamline Steel Pole, Mast Arm & Foundation, COT Std Det T-651	3 EA
52	Concrete Catch Basin Detail 7, Sheet 14	1 EA
58	12" Connector Pipe RGRCP, Class V	9 LF
59	Pipe Collar MAG Std Det 505	1 EA
60	Install 1/2" Screened Decomposed Granite (2" Thickness) Match Joe's Italian Ice DG Color (Landscape Restoration)	33 SY

10 0 10 20
Scale in Feet

Contact Arizona 811 at least two full working days before you begin excavation
ARIZONA811 BLUE STAKE, INC.
Call 811 or click Arizona811.com

Registered Professional Engineer (Civil) CERTIFICATE NO. 40957 PAUL J. BALCH State of Arizona 10/29/20

DEPARTMENT OF PUBLIC WORKS
CITY OF TEMPE
DIVISION OF ENGINEERING
P.O. BOX 5002 TEMPE, ARIZONA 85280

SURVEYED: REK	DESCRIPTION	DATE 10/2020
DESIGNED: JRH	McCLINTOCK DRIVE WIDENING IMPROVEMENTS PAVING PLAN AND PROFILE	PROJECT NO. 5408751A
DRAWN: DBB		
CHECKED: PJB		
SCALE: 1"= 20' HORIZ 1"= 2' VERT		SHT. 23 OF 44

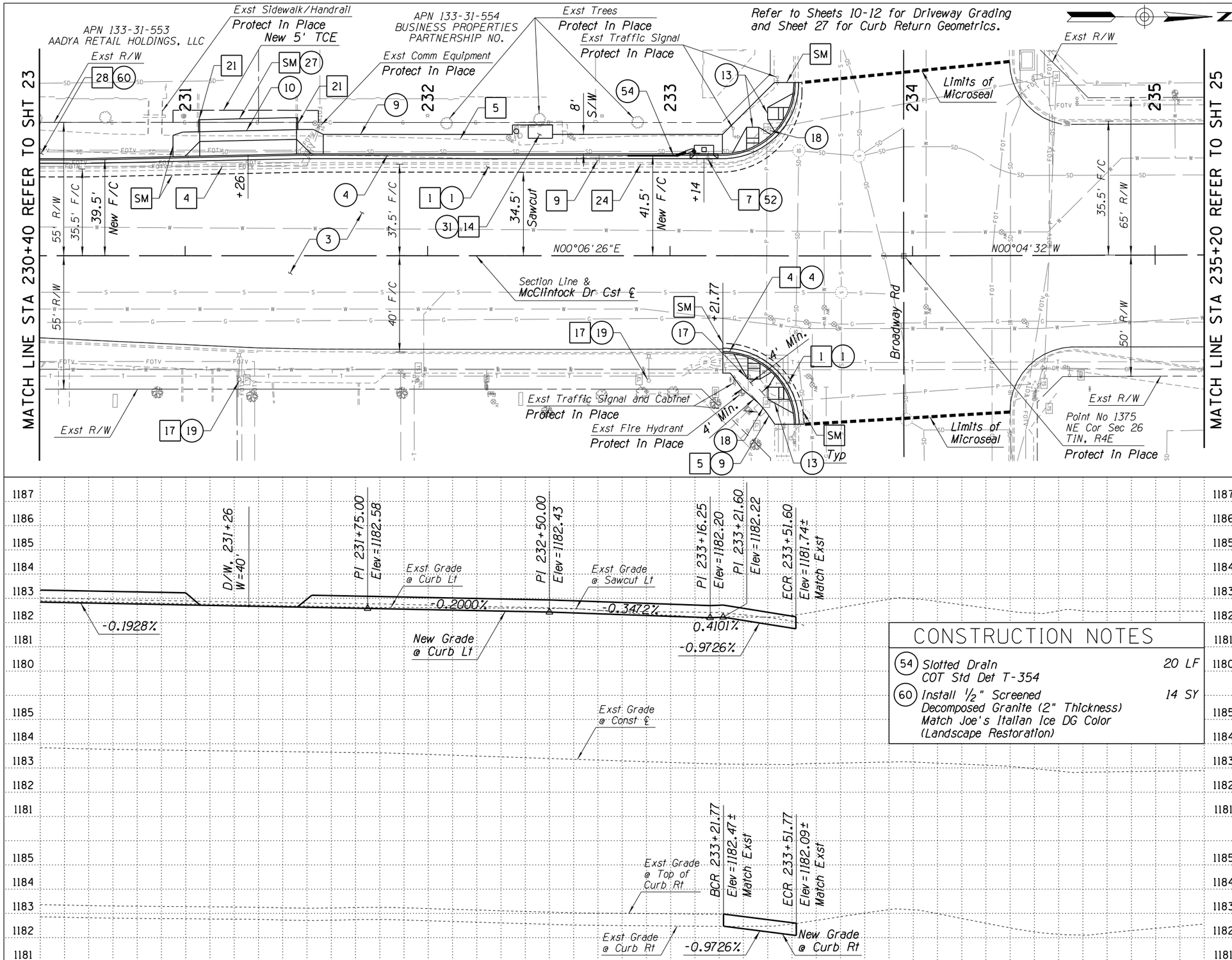

CONSTRUCTION NOTES

SM	Sawcut & Match Exst	395 LF
1	Remove AC Pavement	81 SY
4	Remove Concrete Curb & Gutter	379 LF
5	Remove Concrete Sidewalk	3155 SF
7	Remove Catch Basin	1 EA
9	Relocate Sign w/New Post & Base Refer to Signing & Marking Sheets	
14	Remove Bus Stop Conc Pad & Shelter	1 EA
17	Remove Light Fixture	2 EA
21	Remove & Replace Header Curb	10 LF
24	Remove Slotted Drain	1 EA
28	Remove Landscape Rock (Landscape Restoration)	37 SY
1	Pavement Section No. 1 Microseal Type II 2" AC (R-1/2") 4" AC (A-3/4") 14" ABC, Tack Coat Subgrade Preparation	207 SY
3	Pavement Section No. 3 Microseal Type II	4961 SY
4	Concrete Curb & Gutter MAG Std Det 220-1, Type A	376 LF
9	Concrete Sidewalk MAG Std Det 230	1555 SF
10	Concrete Driveway COT Std Det T-320	436 SF
13	Concrete Sidewalk Ramp MAG Std Det 237-1	4 EA
17	Adjust Valve Frame & Cover COT Std Det T-445	1 EA
18	Adjust Meter Box, Junction Box or Pull Box To Grade	2 EA
19	LED Light Fixture ERSI 013E140ABLCKRL	2 EA
27	Pavement Section No. 5 AC Driveway Tie-In 3" AC (R-1/2"), 6" ABC	20 SY
31	Bus Stop Passenger Shelter Type A, Sheets 7-9	1 EA
52	Concrete Catch Basin Detail 7, Sheet 14	1 EA

CONSTRUCTION NOTES

54	Slotted Drain COT Std Det T-354	20 LF
60	Install 1/2" Screened Decomposed Granite (2" Thickness) Match Joe's Italian Ice DG Color (Landscape Restoration)	14 SY

10 0 10 20
Scale In Feet

Contact Arizona 811 at least two full working days before you begin excavation
ARIZONA811
Call 811 or click Arizona811.com

Registered Professional Engineer (Civil)
CERTIFICATE NO. 40957
PAUL J. BALCH
Date Signed 10/29/20
Arizona U.S.A.

DEPARTMENT OF PUBLIC WORKS
CITY OF TEMPE
DIVISION OF ENGINEERING
P.O. BOX 5002 TEMPE, ARIZONA 85280

SURVEYED: REK	DESCRIPTION	DATE 10/2020
DESIGNED: JRH	McCLINTOCK DRIVE	PROJECT NO.
DRAWN: DBB	WIDENING IMPROVEMENTS	5408751A
CHECKED: PJB	PAVING PLAN AND PROFILE	SHT. 24 OF 44
SCALE: 1"= 20' HORIZ 1"= 2' VERT		

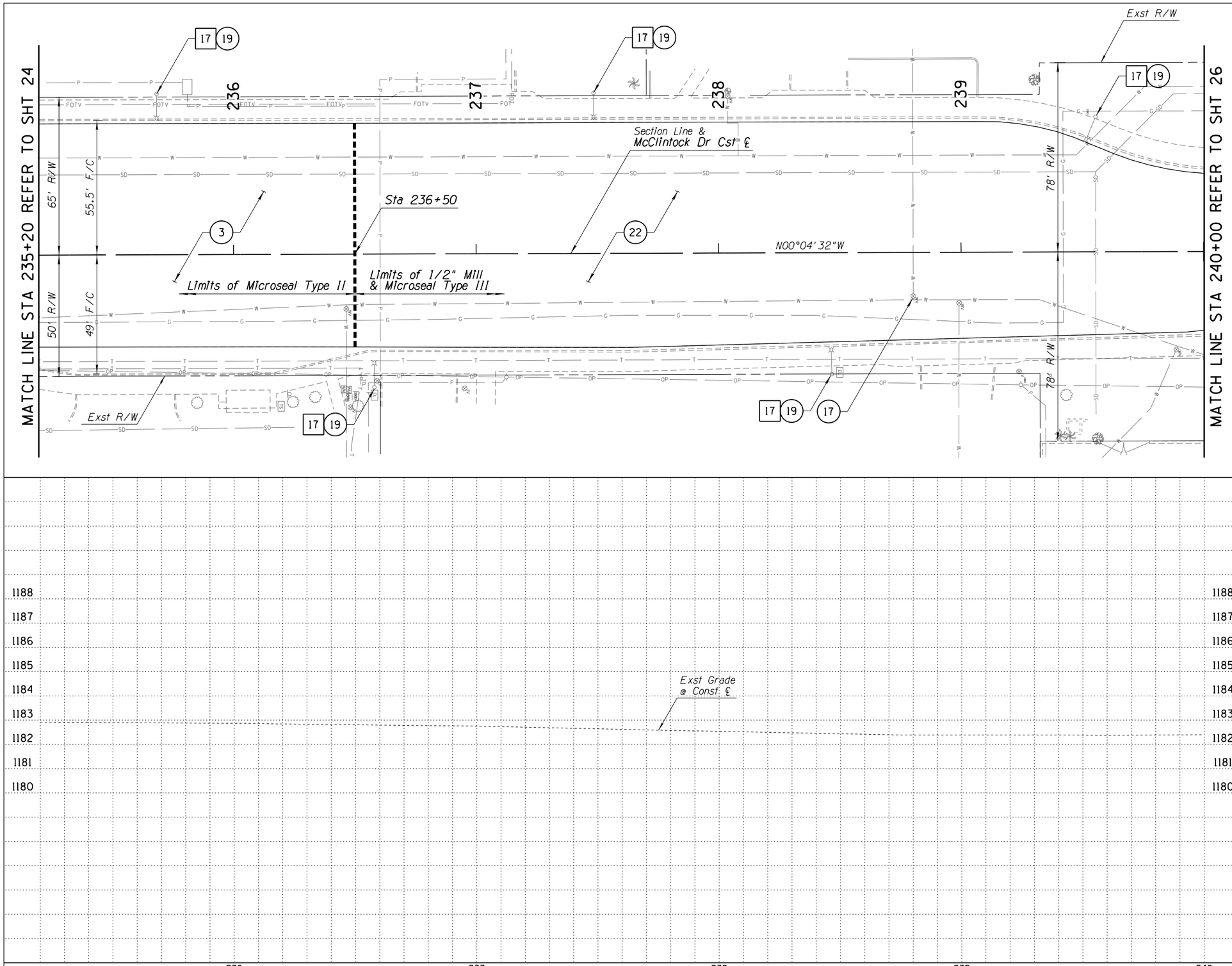

CONSTRUCTION NOTES

17	Remove Light Fixture	5 EA
3	Pavement Section No. 3 Microseal Type II	1331 SY
17	Adjust Valve Frame & Cover COT Std Det T-445	1 EA
19	LED Light Fixture ERS1 013E140ABLCKRL	5 EA
22	Pavement Section No. 4 1/2" Mill & Microseal Type III	3425 SY

10 0 10 20
Scale in Feet

Contact Arizona 811 at least two full working days before you begin excavation
ARIZONA811
Call 811 or click Arizona811.com

Registered Professional Engineer (Civil)
CERTIFICATE NO. 40957
PAUL J. BALCH
Date Signed 10/29/20
Arizona U.S.A.

DEPARTMENT OF PUBLIC WORKS
CITY OF TEMPE
DIVISION OF ENGINEERING
P.O. BOX 5002 TEMPE, ARIZONA 85280

SURVEYED: REK
DESIGNED: JRH
DRAWN: DBB
CHECKED: PJB
SCALE: 1"= 20' HORIZ
1"= 2' VERT

DESCRIPTION
McCLINTOCK DRIVE
WIDENING IMPROVEMENTS
PAVING PLAN AND PROFILE

DATE 10/2020
PROJECT NO.
5408751A
SHT. 25 OF 44

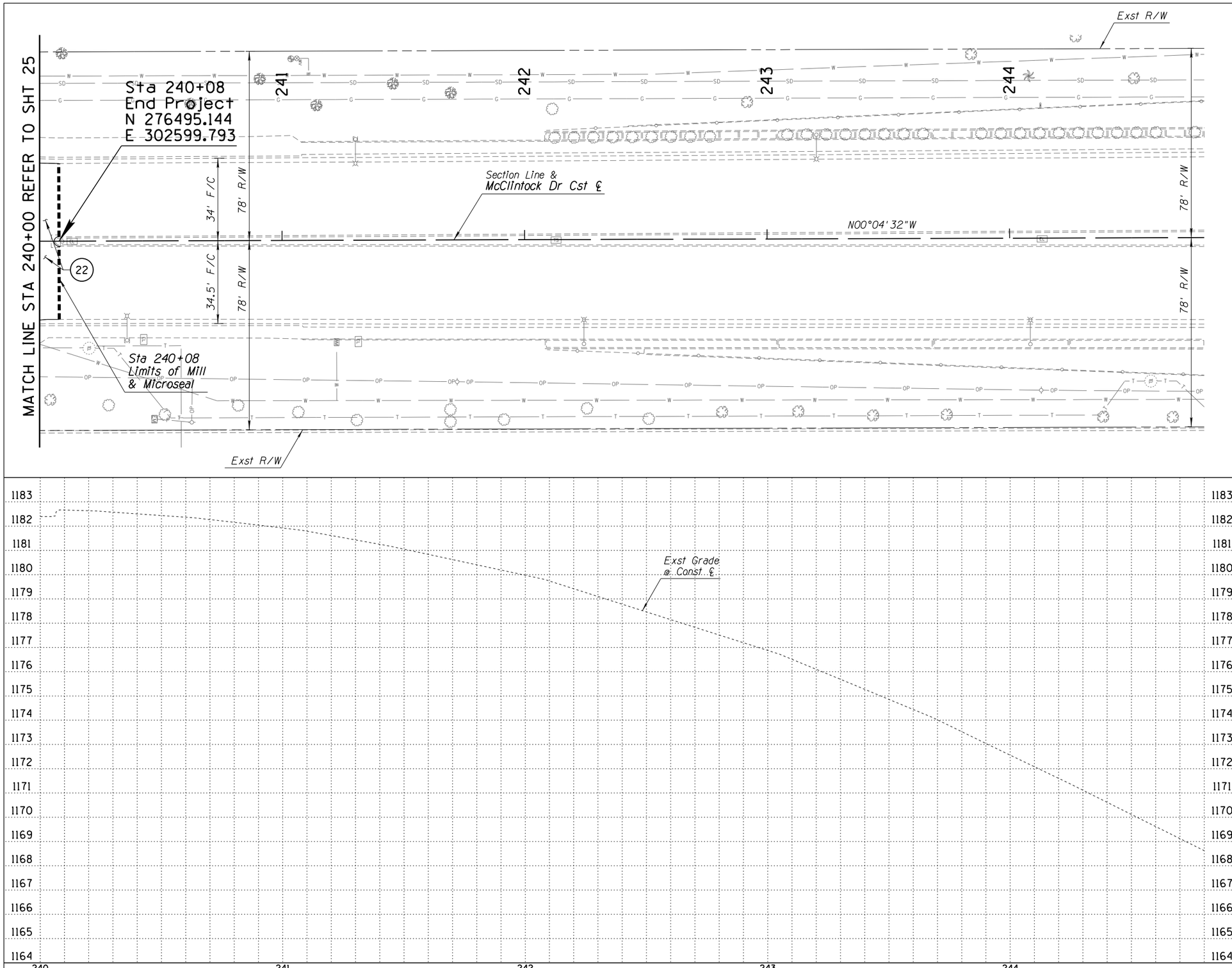

CONSTRUCTION NOTES

22 Pavement Section No. 4 — 57 SY
1/2" Mill & Microseal Type III

10 0 10 20
Scale in Feet

Contact Arizona 811 at least two full working days before you begin excavation
ARIZONA811
Call 811 or click Arizona811.com

Registered Professional Engineer (Civil)
CERTIFICATE NO. 40957
PAUL J. BALCH
Date Signed 10/29/20
Arizona, U.S.A.

DEPARTMENT OF PUBLIC WORKS
CITY OF TEMPE
DIVISION OF ENGINEERING
P.O. BOX 5002 TEMPE, ARIZONA 85280

SURVEYED: REK	DESCRIPTION	DATE 10/2020
DESIGNED: JRH	McCLINTOCK DRIVE WIDENING IMPROVEMENTS PAVING PLAN AND PROFILE	PROJECT NO. 5408751A
DRAWN: DBB		
CHECKED: PJB		
SCALE: 1"= 20' HORIZ 1"= 2' VERT		SHT. 26 OF 44

POINT DATA TABLE			
POINT NO	STATION	OFFSET	ELEVATION
1	206+92.67	40.08' LT	1185.50
2	207+46.81	40.08' LT	1185.55

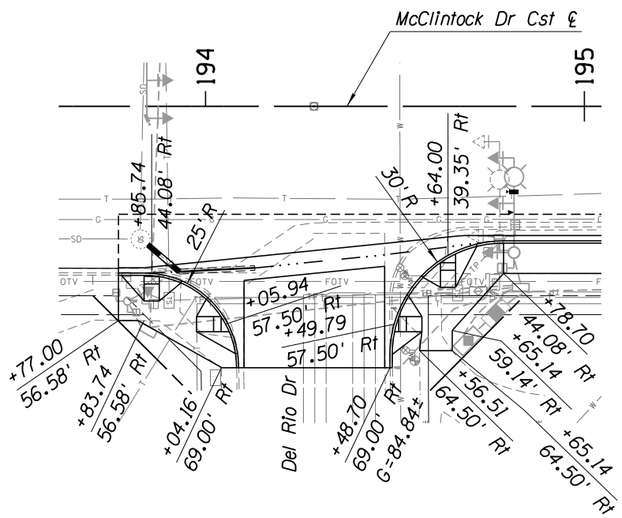

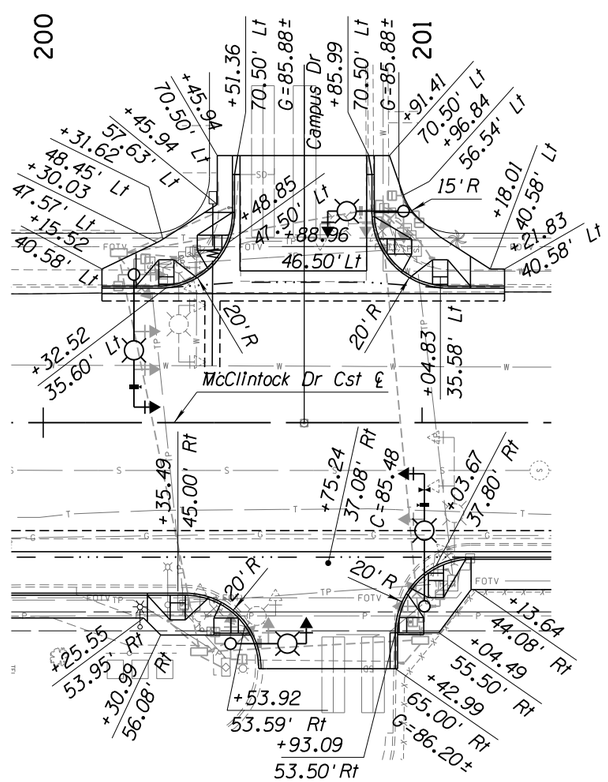

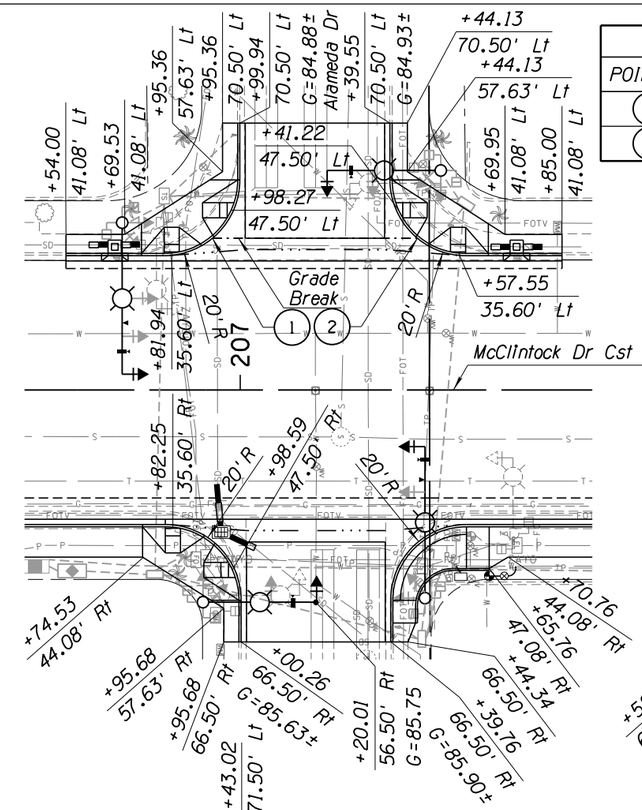

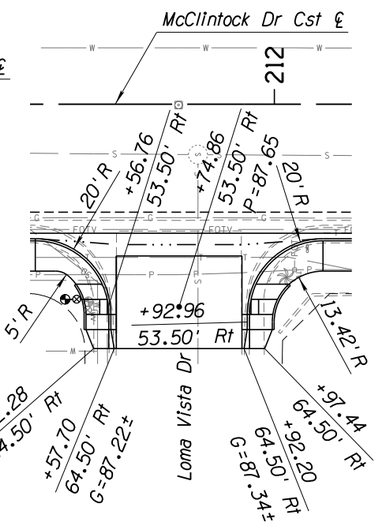

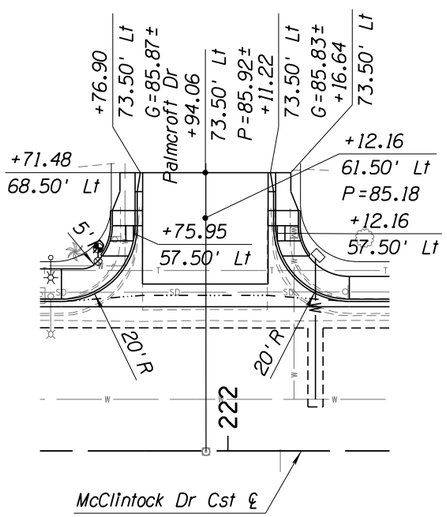

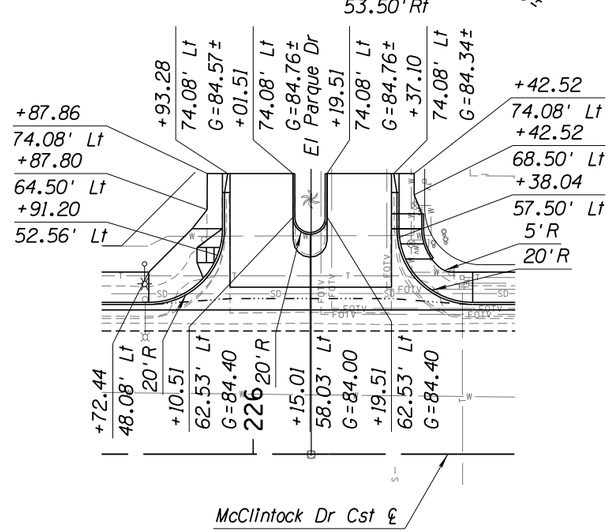

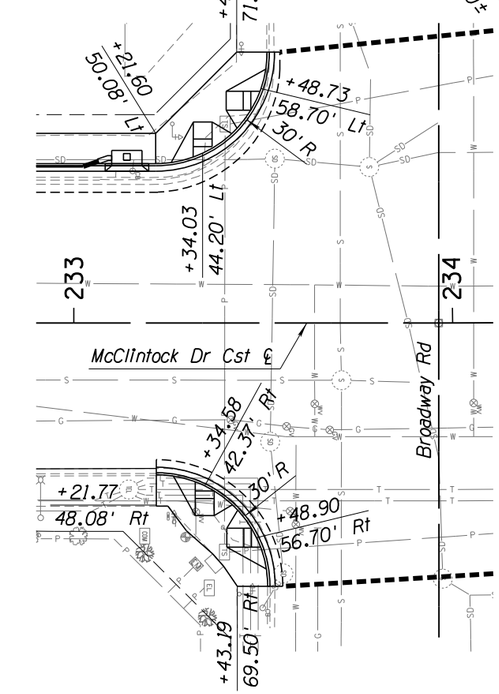

Note: See Detail 1 on Sheet 9 for Sidewalk Ramp Control Point Location.

N

10 0 10 20
Scale In Feet

Contact Arizona 811 at least two full working days before you begin excavation
ARIZONA811 BLUE STAKE, INC.
Call 811 or click Arizona811.com

Registered Professional Engineer (Civil)
CERTIFICATE NO. 40957
PAUL J. BALCH
Date Signed 10/29/20
Paul J. Balch

DEPARTMENT OF PUBLIC WORKS
CITY OF TEMPE
DIVISION OF ENGINEERING
P.O. BOX 5002 TEMPE, ARIZONA 85280

SURVEYED: REK	DESCRIPTION	DATE 10/2020
DESIGNED: JRH	McCLINTOCK DRIVE WIDENING IMPROVEMENTS GEOMETRIC DETAILS	PROJECT NO. 5408751A
DRAWN: DBB		
CHECKED: PJB		
SCALE: 1" = 20'		SHT. 27 OF 44

ENGINEER'S NOTES FOR TRAFFIC SIGNALS:

1. DETAIL AND SPECIFICATION REFERENCES PROVIDED ON THESE PLANS REFER TO THE 2015 CITY OF TEMPE (COT) SUPPLEMENT TO THE MAG UNIFORM STANDARD DETAILS AND SPECIFICATIONS FOR PUBLIC WORKS CONSTRUCTION UNLESS NOTED OTHERWISE.

2. LOCATION OF EQUIPMENT IS REFERENCED IN GROUND COORDINATES TO THE CENTROID OF THE EQUIPMENT OR FOUNDATION UNLESS NOTED OTHERWISE.

TRAFFIC SIGNAL GENERAL NOTES:

1. THE CONTRACTOR SHALL CONTACT COT TRAFFIC OPERATIONS TO SCHEDULE AN ADVANCE MEETING A MINIMUM OF TWO (2)-WEEKS PRIOR TO SIGNAL INSTALLATION. THE MEETING WILL INCLUDE AT A MINIMUM, TRAFFIC OPERATIONS, THE ENGINEER AND THE CONTRACTOR.

2. ALL EQUIPMENT, MATERIALS, TOOLS, WORKMANSHIP, AND LABOR SHALL CONFORM TO WITH THE CITY OF TEMPE (COT) SUPPLEMENT TO THE MAG UNIFORM STANDARD DETAILS AND SPECIFICATIONS FOR PUBLIC WORKS, COT TRAFFIC BARRICADE MANUAL, MANUAL OF UNIFORM TRAFFIC CONTROL DEVICES (MUTCD), ARIZONA DEPARTMENT OF TRANSPORTATION STANDARD SPECIFICATIONS FOR ROAD & BRIDGE CONSTRUCTION, ARIZONA DEPARTMENT OF TRANSPORTATION TRAFFIC SIGNALS & LIGHTING STANDARD DRAWINGS AND THE LATEST ADOPTED EDITION OF THE NATIONAL ELECTRICAL CODE.

3. THE LOCATION OF UTILITIES SHOWN IN THE PLANS ARE APPROXIMATE AND ARE ACCORDING TO THE BEST AVAILABLE INFORMATION PROVIDED AT THE TIME OF THE APPROVED PLANS. ALL INVOLVED UTILITIES MAY NOT BE SHOWN ON THE PLANS. THE CONTRACTOR SHALL BE RESPONSIBLE FOR CONTACTING ALL UTILITY COMPANIES, CONTACTING AZ811 BLUE STAKE CENTER, AND IS RESPONSIBLE FOR POTHOLING FOR EXACT LOCATION OF THE TRAFFIC SIGNAL FOUNDATION PRIOR TO ORDERING ANY SIGNAL POLES OR MAST ARMS, OR BEGINNING ANY CONSTRUCTION OR TRENCHING. THE COT AND THE TRAFFIC SIGNAL ENGINEERS ARE RESPONSIBLE FOR DEVELOPING COT APPROVED SOLUTIONS IN AN EXPEDITIOUS MANNER, IF UNFORSEEN CONDITIONS ARISE.

4. ALL TRAFFIC SIGNAL CONSTRUCTION SHALL BE INSPECTED BY COT TRAFFIC OPERATIONS. INSPECTION SHALL BE SCHEDULED AND COORDINATED THRU THE COT ENGINEERING INSPECTOR.

5. AN APPROVED SET OF PLANS SHALL BE AVAILABLE ON THE JOB SITE AT ALL TIMES.

6. THE CONTRACTOR IS RESPONSIBLE FOR DEVELOPING A TRAFFIC CONTROL PLAN AND SUBMITTING TO THE COT TRAFFIC OPERATIONS FOR APPROVAL. A COPY OF THE APPROVED CONSTRUCTION TRAFFIC CONTROL PLAN SHALL REMAIN AT THE PROJECT SITE AT ALL TIMES.

LEGEND

EXISTING	NEW	DESCRIPTION
—TP——— ——	--------	TRAFFIC SIGNAL CONDUIT
		NO 7 PULLBOX
		CONTROLLER CABINET W/ FOUNDATION
		METER PEDESTAL
		TRAFFIC SIGNAL FOUNDATION
		TRAFFIC SIGNAL INDICATION
		PEDESTRIAN INDICATION (PED)
		PEDESTRIAN/BICYCLE PUSH BUTTON (PB)
		VIDEO DETECTION CAMERA (VDC)
	or	EMERGENCY VEHICLE PRE-EMPTION (EVP)
		LOOP DETECTOR

TRAFFIC SIGNAL EQUIPMENT NOTES:

1. ALL POLES AND MAST ARMS SHALL BE PAINTED TEMPE BRONZE (REFER TO COT SPEC SEC T-200.10).

2. CONTROLLER CABINET SHALL BE ORIENTED SO THAT CABINET OPENS AWAY FROM THE STREET.

3. PRIOR TO CONSTRUCTION, THE CONTRACTOR SHALL POTHOLE FOR UTILITIES AT ALL PROPOSED LOCATIONS FOR FOUNDATIONS. THE CONTRACTOR SHALL POTHOLE FOR UTILITIES WHERE CONDUIT INSTALLATION SHALL CROSS EXISTING FACILITIES.

4. TOPS OF POLE FOUNDATIONS SHALL BE AT THE SAME ELEVATION AS THAT OF ADJACENT SIDEWALK OR FLUSH WITH THE SIDEWALK. CONCRETE POLE APRONS SHALL BE INSTALLED AROUND POLE BASES AS NECESSARY TO SATISFY CURRENT ADA ACCESSIBILITY GUIDELINES. IF NO SIDEWALK IS PRESENT, THE ELEVATIONS SHALL MATCH TOP OF ADJACENT CURB. NO TURF AND/OR IRRIGATION SPRINKLERS SHALL BE LOCATED WITHIN 5' OF TRAFFIC SIGNALS AND EQUIPMENT.

5. THE CONTRACTOR SHALL BE RESPONSIBLE TO PERFORM TESTING ON ALL TRAFFIC SIGNAL EQUIPMENT TO ENSURE EQUIPMENT WILL PROVIDE FOR A FULLY FUNCTIONAL SIGNALIZED INTERSECTION.

6. THE CONTRACTOR SHALL CONTACT COT TRAFFIC ENGINEERING A MINIMUM OF 48-HOURS PRIOR TO SIGNAL INSTALLATION TO REQUEST A SIGNAL TECHNICIAN TO BE PRESENT AT INSTALL.

7. CONTRACTOR SHALL COORDINATE WITH PHIL PANDALIS, COT TRAFFIC OPERATIONS (480) 316-3977, FOR TRANSPORTING & DEPOSITING ALL SALVAGED SIGNAL EQUIPMENT.

8. THE CONTRACTOR SHALL FURNISH AND INSTALL A VIDEO DETECTION CAMERA SYSTEM TO PROVIDE FOR A FULLY FUNCTIONAL VIDEO DETECTION SYSTEM. ALL VIDEO DETECTION SYSTEMS SHALL BE ITS PLUS.

9. THE CONSTRACTOR SHALL FURNISH AND INSTALL NEW LUMINAIRES FOR ADOT STYLE POLES. LUMINAIRES SHALL BE 120/277V LED, GE EVOLVE CAT# ERL2-0-16-C3-30-D-DKBZ-ALU OR APPROVED EQUAL WITH SHORTING CAPS INSTALLED.

10. THE CONTRACTOR SHALL FURNISH EITHER UNI-DIRECTIONAL GTT OPTICOM 711 OR DUAL-DIRECTIONAL GTT OPTICOM 722 PRE-EMPTION AND VERIFY COMPATIBILITY WITH EXISTING CARD FOR A FULLY FUNCTIONAL PRE-EMPTION SYSTEM.

11. THE CONTRACTOR SHALL CONTACT COT TRAFFIC OPERATIONS A MINIMUM OF TWO (2)-WEEKS PRIOR TO INSTALLATION OF VIDEO DETECTION SYSTEMS AND PRE-EMPTION TO COORDINATE THE DETECTOR LINE OF SIGHT.

IMSA CABLE 19-1, #14 AWG SOLID, 42 CONDUCTOR 2 PHASE POLE RUN COLOR

WIRE COLOR	USE	PHASE CHART COLOR	
RED BUNDLE			
BLUE	EBLT RED	ORANGE	PHASE 1
ORANGE	EBLT YELLOW	ORANGE	
GREEN	EBLT GREEN	ORANGE	
GREEN/BLACK	WB RED	WHITE	PHASE 2
RED/BLACK	WB YELLOW	WHITE	
WHITE/BLACK	WB GREEN	WHITE	
BLUE/BLACK	WB D/W	WHITE/WHITE	PHASE 2 PED
ORANGE/BLACK	WB WALK	WHITE/WHITE	
BLACK/WHITE	WB PPB	GREY	
BLUE/WHITE	NBLT RED	YELLOW	PHASE 3
GREEN/WHITE	NBLT YELLOW	YELLOW	
RED/WHITE	NBLT GREEN	YELLOW	
ORANGE/RED	SB RED	GREEN	PHASE 4
WHITE/RED	SB YELLOW	GREEN	
BLACK/RED	SB GREEN	GREEN	
RED/GREEN	SB D/W	GREEN/GREEN	PHASE 4 PED
BLUE/RED	SB WALK	GREEN/GREEN	
ORANGE/GREEN	SB PPB	BROWN	
INNER WHITE BUNDLE			
RED	WBLT RED	GREY	PHASE 5
WHITE	WBLT YELLOW	GREY	
BLACK	WBLT GREEN	GREY	
RED/WHITE	EB RED	RED	PHASE 6
BLACK/WHITE	EB YELLOW	RED	
BLUE/BLACK	EB GREEN	RED	
BLUE/WHITE	EB D/W	RED/RED	PHASE 6 PED
GREEN/WHITE	EB WALK	RED/RED	
BLACK/RED	EB PPB	ORANGE	
BLUE/RED	SBLT RED	BROWN	PHASE 7
ORANGE/RED	SBLT YELLOW	BROWN	
WHITE/RED	SBLT GREEN	BROWN	
RED/GREEN	OLA GREEN	GREEN/WHITE	
ORANGE/GREEN	OLA YELLOW	GREEN/WHITE	
CORE BLUE BUNDLE			
RED	NB RED	BLUE	PHASE 8
WHITE	NB YELLOW	BLUE	
BLACK	NB GREEN	BLUE	
ORANGE	NB D/W	BLUE/BLUE	PHASE 8 PED
GREEN	NB WALK	BLUE/BLUE	
BLUE	NB PPB	YELLOW	
WHITE/BLACK	OLA RED	GREEN/WHITE	
RED/BLACK	OLB GREEN	BLUE/RED	
GREEN/BLACK	OLB YELLOW	BLUE/RED	
ORANGE/BLACK	OLB RED	BLUE/RED	

Contact Arizona 811 at least two full working days before you begin excavation
ARIZONA811 BLUE STAKE, INC.
Call 811 or click Arizona811.com

Registered Professional Engineer (Civil) CERTIFICATE NO. 40957 PAUL J. BALCH Date Signed 10/29/20

DEPARTMENT OF PUBLIC WORKS
CITY OF TEMPE
DIVISION OF ENGINEERING
P.O. BOX 5002 TEMPE, ARIZONA 85280

SURVEYED: REK	DESCRIPTION	DATE 10/2020
DESIGNED: JRH	McCLINTOCK DRIVE WIDENING IMPROVEMENTS TRAFFIC SIGNAL GENERAL NOTES	PROJECT NO. 5408751A
DRAWN: DBB		
CHECKED: PJB		
SCALE: N/A		SHT. 28 OF 44

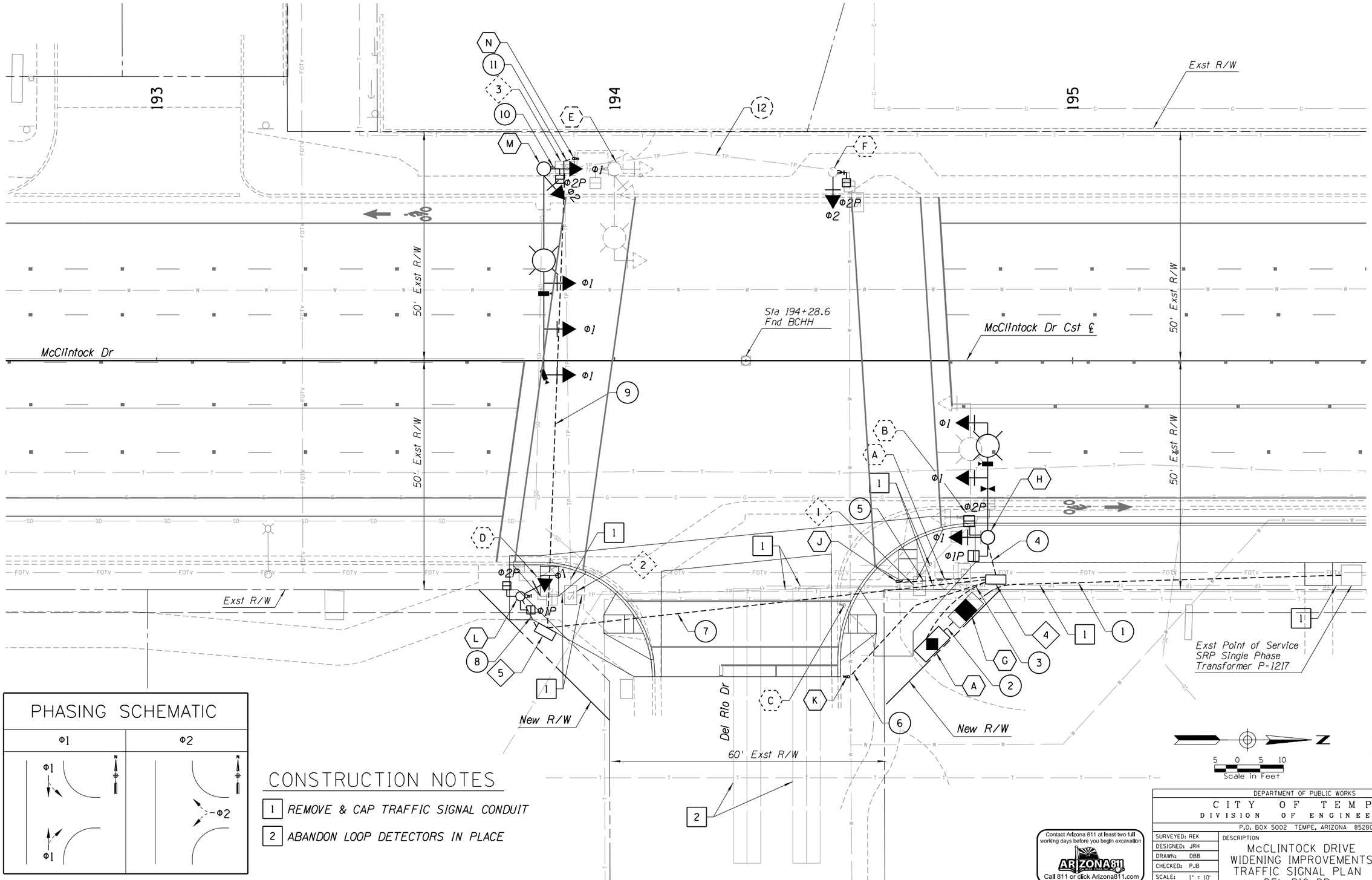

PHASING SCHEMATIC

CONSTRUCTION NOTES

1. REMOVE & CAP TRAFFIC SIGNAL CONDUIT
2. ABANDON LOOP DETECTORS IN PLACE

Contact Arizona 811 at least two full working days before you begin excavation
ARIZONA811
Call 811 or click Arizona811.com

DEPARTMENT OF PUBLIC WORKS		
CITY OF TEMPE		
DIVISION OF ENGINEERING		
P.O. BOX 5002 TEMPE, ARIZONA 85280		
SURVEYED: REK	DESCRIPTION	DATE 10/2020
DESIGNED: JRH	McCLINTOCK DRIVE WIDENING IMPROVEMENTS TRAFFIC SIGNAL PLAN DEL RIO DR	PROJECT NO. 5408751A
DRAWN: DBB		
CHECKED: PJB		
SCALE: 1" = 10'		SHT. 29 OF 44

10/29/2020 J:\2015\1015020.08 MCCLINTOCK DRIVE WIDENING IMPROVEMENTS\CAD_SOUTH\15020_08-TS.DGN

EQUIPMENT SCHEDULE

TRAFFIC SIGNAL CONTROLLER				REMARKS	LOCATION
CABINET	TYPE	CONTROLLER	FOUNDATION		
A	-	-	DET T1, THIS SHEET	REMOVE & RELOCATE ALL EQUIPMENT TO NEW FOUNDATION REMOVE EXST FOUNDATION BACKFILL & COMPACT VOID	194+72 49' RT - EXIST 194+69.5 62' RT - NEW
G	METERED SERVICE PEDESTAL	MYERS	ADOT STD DET T.S. 2-6	CONSTRUCT NEW FOUNDATION INSTALL NEW METER SERVICE PEDESTAL	194+76.5 54' RT

POLE		MAST ARM		SIGNALS		P.B. SIGN	REMARKS	LOCATION
NO.	TYPE	SIG.	LUM.	MTG.	FACE			
B	Q MOD	25'	15'	I V	F F	ADA PED PB W/SIGN	REMOVE POLE & ALL EQUIPMENT REMOVE FOUNDATION BACKFILL & COMPACT VOID RELOCATE METRO SIGN TO POLE H	194+77.5 34' RT
C	PB	-	-	-	-	ADA PED PB W/SIGN	REMOVE POLE & ALL EQUIPMENT REMOVE FOUNDATION BACKFILL & COMPACT VOID	194+50 53' RT
D	A	-	-	IV VII	F 2-PED	ADA PED PB W/SIGN	REMOVE POLE & ALL EQUIPMENT REMOVE FOUNDATION BACKFILL & COMPACT VOID	193+63 48' RT
E	Q	20'	15'	I VII V	F 2-F PED	ADA PED PB W/SIGN	REMOVE POLE & ALL EQUIPMENT REMOVE FOUNDATION BACKFILL & COMPACT VOID RELOCATE METRO SIGN TO POLE M	194+00 42' LT
F	A	-	-	IV XI	F PED	SEE NOTE 1	REMOVE EXISTING SIGNAL FACE & PED INDICATION & MOUNTING ASSEMBLIES, REMOVE PED PB REPLACE WITH NEW 12" SIGNAL FACE PAINT POLE PER COT SPEC SEC T-200.10	194+47.5 41' LT
H	Q	25'	20'	II II XI XI XI	F F F PED PED	-	INSTALL DUAL-DIRECTIONAL EVP ON SIGNAL MAST ARM, EQUIPMENT NOTE 10 INSTALL VDC ON SIGNAL MAST ARM, EQUIPMENT NOTE 8	194+81.5 38' RT
J	PB 55"	-	-	-	-	SEE NOTE 1	-	194+62 48' RT
K	PB 55"	-	-	-	-	SEE NOTE 2	-	194+51 69' RT
L	A (12')	-	-	IV XI XI	F PED PED	SEE NOTE 1	-	193+79 51' RT
M	R	45'	20'	II II II XI XI XI	F F F F F PED	-	INSTALL 2-VDC ON SIGNAL MAST ARM, EQUIPMENT NOTE 8	193+84.5 42' LT
N	PB 55"	-	-	-	-	SEE NOTE 1	-	193+91 44' LT

PULLBOX SCHEDULE

NO.	TYPE	LOCATION	REMARK
1		194+67 49' RT	REMOVE
2		193+91 51' RT	REMOVE
3		193+89 42' LT	PROTECT IN PLACE
4	NO. 7 T-453	194+84 48' RT	FURNISH & INSTALL
5	NO. 7 T-453	193+85 59' RT	FURNISH & INSTALL

NOTES:

1. INSTALL CAMPBELL AUDIBLE PUSH BUTTON ASSEMBLY W/REGULATORY SIGN (R10-3E)
2. INSTALL 2" PUSH BUTTON ASSEMBLY W/REGULATORY SIGN (COT STD DET T-577)

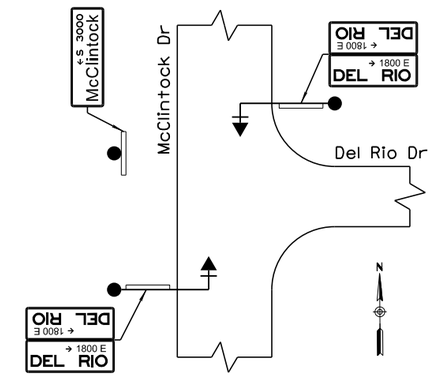

METRO SIGN LAYOUT

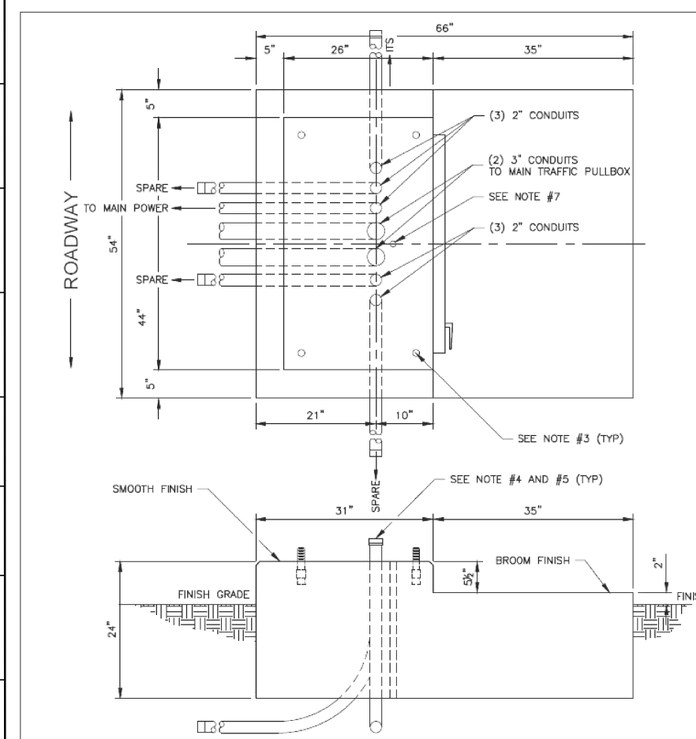

NOTES:

1. UNSTABLE SOIL AND/OR STEEP SLOPES MAY REQUIRE DEEPER FOUNDATIONS. CONTROL CABINETS SHALL NOT BE LOCATED IN DRAINAGE AREAS, UNLESS THE CABINETS ARE ELEVATED.
2. FOR CONDUIT SIZE, LOCATION, AND QUANTITY, SEE PLANS. CONDUITS FOR BOTH THE METER PEDESTAL FOUNDATION AND CONTROLLER CABINET FOUNDATION SHALL BE THE SIZE AND QUANTITY AS SPECIFIED IN THE PLAN ON DWG NO. TS-04 AND CONDUCTOR SCHEDULE ON DWG NO. TS-07.
3. ANCHOR BOLTS SHALL BE GALVANIZED (4) ½" X 4" DROP IN WEDGE ANCHORS COMPLETE WITH NUTS AND WASHERS. ANCHOR BOLT PROJECTION ABOVE FOUNDATION SHALL BE 1½" MIN. TO 2½" MAX. CONTROLLER CABINET FOUNDATION BOLT LOCATION DIMENSIONS SHALL MATCH THE SPECIFICATIONS FOR THE TYPE IV CABINET AS SPECIFIED IN THE POLE SCHEDULE ON DWG NO. TS-05.
4. CONDUIT PROJECTION ABOVE FOUNDATION SHALL 2" MIN. TO 4" MAX. ALL CONDUITS SHALL BE CAPPED.
5. SPACING BETWEEN CONDUITS SHALL BE 1½" MINIMUM.
6. USE AN APPROVED SILICON SEALER RTV TYPE, GREY IN COLOR OR CLEAR, BETWEEN CABINET AND FOUNDATION.
7. 1" SLEEVE FOR GROUND ROD. ADJUST GROUND ROD SLEEVE TO PREVENT CONFLICTS WITH CONDUIT LOCATIONS.
8. CONDUITS FOR BOTH THE METER PEDES FOUNDATION AND CONTROLLER CABINET FOUNDATION SHALL BE THE SIZE AND QUANTITY AS SPECIFIED IN THE PLAN ON DWG NO. TS-04 AND CONDUCTOR SCHEDULE ON DWG NO. TS-07.

DETAIL T1
CABINET FOUNDATION DETAILS

Contact Arizona 811 at least two full working days before you begin excavation
ARIZONA811
Call 811 or click Arizona811.com

Registered Professional Engineer (Civil) CERTIFICATE NO. 40957 PAUL J. BALCH Date Signed 10/29/20 Arizona, U.S.A.

DEPARTMENT OF PUBLIC WORKS
CITY OF TEMPE
DIVISION OF ENGINEERING
P.O. BOX 5002 TEMPE, ARIZONA 85280

SURVEYED: REK DESIGNED: JRH DRAWN: DBB CHECKED: PJB SCALE: N/A	DESCRIPTION McCLINTOCK DRIVE WIDENING IMPROVEMENTS TRAFFIC SIGNAL EQUIPMENT SCHEDULE - DEL RIO DR	DATE 10/2020 PROJECT NO. 5408751A SHT. 30 OF 44

CONDUIT & CONDUCTOR SCHEDULE

CONDUIT RUN NO		1	2	3			4	5	6	7			8	9			10	11	12
CONDUIT SIZE (NO), IN INCHES		2½	3	3	3	2	3	2	2	3	3	2	3	3	3	2	3	2	E
CONDUIT SERVES		G	A	F, H, J, K, L, M, N			H	J	K	F, L, M, N			L	F, M, N			M	N	F
DEVICES	PHASE	NUMBER OF WIRES																	
SIGNAL HEAD PED SIGNAL HEAD PED PB	#14 IMSA 19-1, 42 CONDUCTOR	CONDUIT BY CONTRACTOR-CONDUCTORS BY SRP		1						1				1					
	#14 IMSA 19-1, 7 CONDUCTOR						1										1		
	#14 IMSA 19-1, 4 CONDUCTOR						4	1	1				4				5	1	3
	#8 WHITE THW COMMON, SOLID			1						1				1					
GROUND	#8 GREEN THW, SOLID		1	1	1		1	1	1	1	1		1	1	1		1	1	1
LUMINAIRE	#10 RED THW, SOLID, RED TAPE		1	1			1			1				1			1		
	#10 WHITE THW, SOLID		1	1			1			1				1			1		
PRE-EMPTION	GTT OPTICOM, MODEL 138 DETECTOR CABLE				1		1												
VIDEO DETECTION	ITS+ COAX/POWER CABLING				3		1				2				2		2		
SERVICE	#6 SERVICE (120V/240V)		1																
	#6 NEUTRAL (WHITE)		1																

CONDUIT & CONDUCTOR NOTES:

1. REFER TO SPECIAL PROVISIONS FOR CONDUIT DEPTHS.
2. CONDUCTORS USED FOR TRAFFIC SIGNAL AND INTERSECTION LIGHTING SHALL CONFORM TO THE REQUIREMENTS OF THE CONDUCTOR TABLES
3. THE IMSA 42, 7, & 4-CONDUCTORS SHALL BE #14 AWG IMSA 19-1. ALL IMSA CONDUCTORS SHALL BE SOLID.
4. THE CONTRACTOR SHALL SUPPLY AND INSTALL ALL CONDUCTORS REQUIRED FOR A COMPLETE AND OPERATIONAL TRAFFIC SIGNAL SYSTEM.
5. THE 42-CONDUCTOR CABLE SHALL RUN FROM THE CONTROLLER TO THE PULLBOXES. ALL IMSA CONDUCTORS SHALL BE SPLICED WITH A BUCHANAN CRIMP (MODEL 2006S) AND SPLICE CAP (MODEL 2007) AND ENCLOSED IN A WATERPROOF ENCLOSURE.
6. ALL CONDUIT RUNS ARE SHOWN SCHEMATICALLY FOR CLARITY. ACTUAL CONDUIT RUN LOCATIONS WILL EXTEND BETWEEN POLES, PULLBOXES, AND CABINETS IN A STRAIGHT FASHION.
7. EMERGENCY VEHICLE PRE-EMPTION (EVP) AND VIDEO DETECTION CAMERA (VDC) DEVICE CABLE SHALL RUN CONTINUOUSLY FROM THE CABINET TO THE EVP.
8. THE CONTRACTOR SHALL BE RESPONSIBLE FOR PROVIDING MULTICOLOR CONDUCTORS WHICH MEET THE COLOR CODING CRITERIA PROVIDED ON SHEET 39.

Contact Arizona 811 at least two full working days before you begin excavation
ARIZONA811 BLUE STAKE, INC.
Call 811 or click Arizona811.com

Registered Professional Engineer (Civil) CERTIFICATE NO. 40957 PAUL J. BALCH Date Signed 10/29/20

DEPARTMENT OF PUBLIC WORKS
CITY OF TEMPE
DIVISION OF ENGINEERING
P.O. BOX 5002 TEMPE, ARIZONA 85280

SURVEYED: REK	DESCRIPTION	DATE 10/2020
DESIGNED: JRH	McCLINTOCK DRIVE WIDENING IMPROVEMENTS CONDUIT & CONDUCTOR SCHEDULE - DEL RIO DR	PROJECT NO. 5408751A
DRAWN: DBB		
CHECKED: PJB		
SCALE: N/A		SHT. 31 OF 44

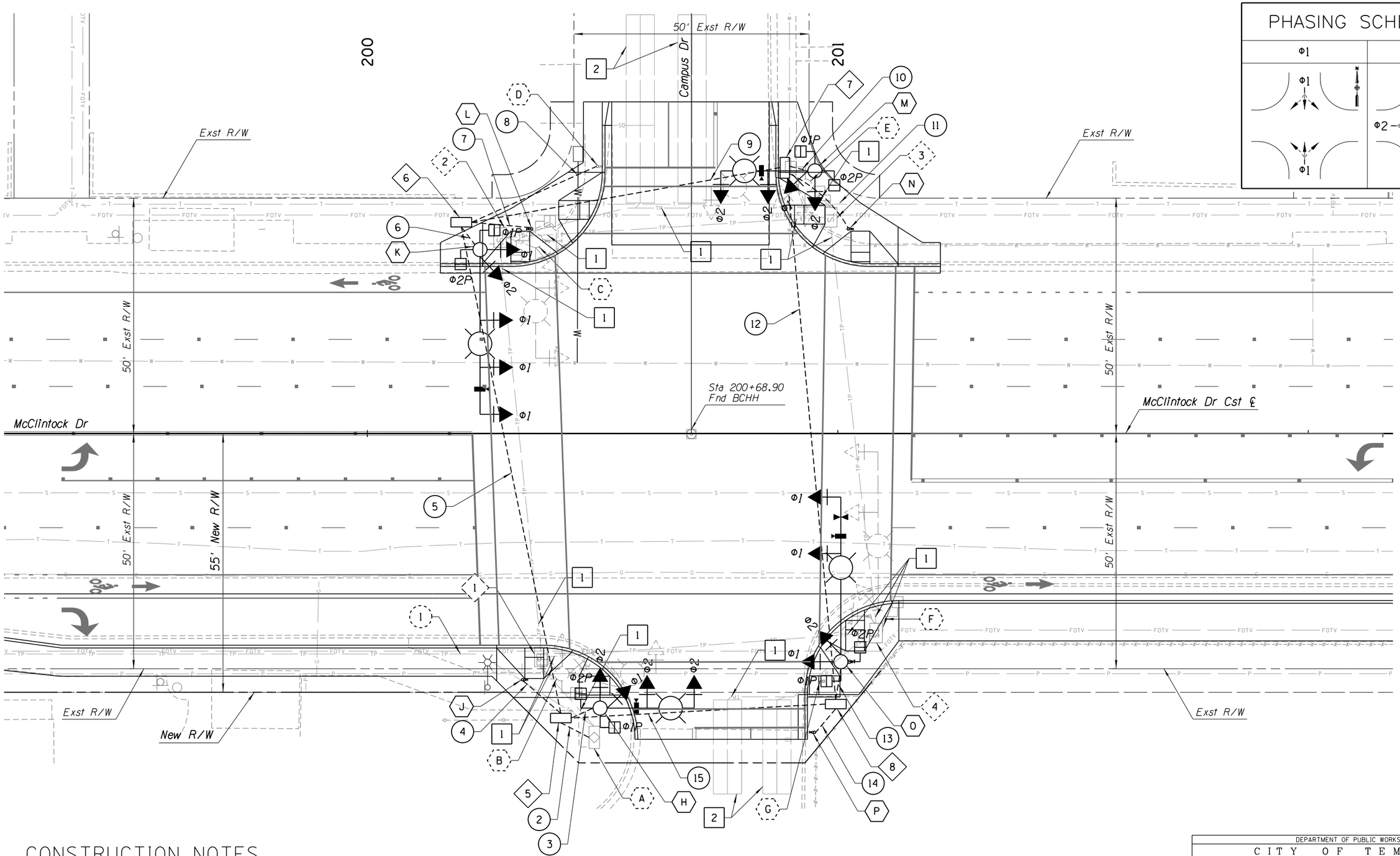

CONSTRUCTION NOTES

1. REMOVE & CAP TRAFFIC SIGNAL CONDUIT
2. ABANDON LOOP DETECTORS IN PLACE

5 0 5 10
Scale In Feet

Contact Arizona 811 at least two full working days before you begin excavation
ARIZONA811
Call 811 or click Arizona811.com

Registered Professional Engineer (Civil) CERTIFICATE NO. 40957 PAUL J. BALCH Date Signed 10/29/20

DEPARTMENT OF PUBLIC WORKS		
CITY OF TEMPE DIVISION OF ENGINEERING P.O. BOX 5002 TEMPE, ARIZONA 85280		
SURVEYED: REK DESIGNED: JRH DRAWN: DBB CHECKED: PJB SCALE: 1" = 10'	DESCRIPTION McCLINTOCK DRIVE WIDENING IMPROVEMENTS TRAFFIC SIGNAL PLAN CAMPUS DR	DATE 10/2020 PROJECT NO. 5408751A SHT. 32 OF 44

EQUIPMENT SCHEDULE

TRAFFIC SIGNAL CONTROLLER				REMARKS	LOCATION
CABINET	TYPE	CONTROLLER	FOUNDATION		
A	IV	-	-	TO REMAIN	200+48 65' RT

POLE		MAST ARM		SIGNALS		P.B. SIGN	REMARKS	LOCATION
NO.	TYPE	SIG.	LUM.	MTG.	FACE			
B	Q	20'	10'	I XI XI	F F F	ADA PED PB W/SIGN	REMOVE POLE & ALL EQUIPMENT REMOVE EXISTING FOUNDATION BACKFILL & COMPACT VOID RELOCATE METRO SIGN TO POLE H	200+41.5 51' RT
C	Q	25'	10'	I I VII VII	F F 2-F 2-PED	ADA PED PB W/SIGN	REMOVE POLE & ALL EQUIPMENT REMOVE EXISTING FOUNDATION BACKFILL & COMPACT VOID RELOCATE METRO SIGN TO POLE K	200+36 41' LT
D	-	-	-	-	-	ADA PED PB W/SIGN	ADJUST TO GRADE REMOVE & REPLACE BIKE PB, SEE NOTE 2	200+49 57' LT
E	Q	20'	10'	I XI XI	F F F	ADA PED PB W/SIGN	REMOVE POLE & ALL EQUIPMENT REMOVE EXISTING FOUNDATION BACKFILL & COMPACT VOID RELOCATE METRO SIGN TO POLE M	200+93 53' LT
F	Q	35'	15'	I I VII VII	F F 2-F 2-PED	ADA PED PB W/SIGN	REMOVE POLE & ALL EQUIPMENT REMOVE EXISTING FOUNDATION BACKFILL & COMPACT VOID RELOCATE METRO SIGN TO POLE O	201+08.5 39' RT
G	-	-	-	-	-	-	REMOVE POLE & ALL EQUIPMENT REMOVE EXISTING FOUNDATION BACKFILL & COMPACT VOID	200+97 53' RT
H	Q	20'	15'	II II XI XI XI XI	F F F F PED PED	-	INSTALL METRO SIGN FROM POLE B ON SIGNAL MAST ARM INSTALL VDC ON SIGNAL MAST ARM EQUIPMENT NOTE 8	200+49.5 58' RT
J	PB 55"	-	-	-	-	SEE NOTE 1	-	200+33 52' RT
K	Q	35'	20'	II II II XI XI XI XI	F F F F F PED PED	-	INSTALL METRO SIGN FROM POLE C ON SIGNAL MAST ARM INSTALL VDC ON SIGNAL MAST ARM, EQUIPMENT NOTE 8	200+24 39' LT
L	PB 55"	-	-	-	-	SEE NOTE 1	-	200+35 44' LT
M	Q	20'	15'	II II XI XI XI XI	F F F F PED PED	-	INSTALL METRO SIGN FROM POLE E ON SIGNAL MAST ARM INSTALL VDC ON SIGNAL MAST ARM, EQUIPMENT NOTE 8	200+95 56' LT
N	PB 55"	-	-	-	-	SEE NOTE 1	-	201+02 44' LT
O	Q	35'	20'	II II XI XI XI XI	F F F F PED PED	SEE NOTE 1	INSTALL METRO SIGN FROM POLE F ON SIGNAL MAST ARM INSTALL VDC ON SIGNAL MAST ARM, EQUIPMENT NOTE 8 INSTALL DUAL-DIRECTIONAL EVP, EQUIPMENT NOTE 10	201+00 48' RT
P	PB 55"	-	-	-	-	SEE NOTE 2	-	200+94 63' RT

PULLBOX SCHEDULE

NO.	TYPE	LOCATION	REMARKS
1		200+37 47' RT	REMOVE
2		200+28 42' LT	REMOVE
3		200+98.5 46' LT	REMOVE
4		201+08 42' RT	REMOVE
5	NO. 7 T-453	200+41 60' RT	FURNISH & INSTALL
6	NO. 7 T-453	200+20 45' LT	FURNISH & INSTALL
7	NO. 7 T-453	200+89 57' LT	FURNISH & INSTALL
8	NO. 7 T-453	201+00 57' RT	FURNISH & INSTALL

NOTES:

1. INSTALL CAMPBELL AUDIBLE PUSH BUTTON ASSEMBLY W/REGULATORY SIGN (R10-3E)
2. INSTALL 2" PUSH BUTTON ASSEMBLY W/REGULATORY SIGN (COT STD DET T-577)

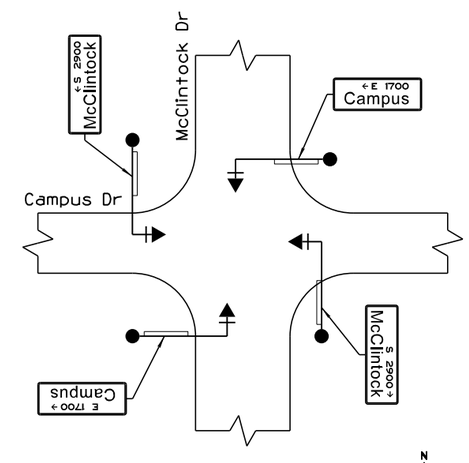

METRO SIGN LAYOUT

N

Contact Arizona 811 at least two full working days before you begin excavation
ARIZONA811
Call 811 or click Arizona811.com

Registered Professional Engineer (Civil) CERTIFICATE NO. 40957 PAUL J. BALCH Date Signed 10/29/20 Arizona U.S.A.

DEPARTMENT OF PUBLIC WORKS		
CITY OF TEMPE DIVISION OF ENGINEERING		
P.O. BOX 5002 TEMPE, ARIZONA 85280		
SURVEYED: REK DESIGNED: JRH DRAWN: DBB CHECKED: PJB SCALE: N/A	DESCRIPTION McCLINTOCK DRIVE WIDENING IMPROVEMENTS TRAFFIC SIGNAL EQUIPMENT SCHEDULE - CAMPUS DR	DATE 10/2020 PROJECT NO. 5408751A SHT. 33 OF 44

CONDUIT & CONDUCTOR SCHEDULE

CONDUIT RUN NO		(1)	(2)			(3)	(4)	(5)			(6)	(7)	(8)	(9)			(10)	(11)	(12)			(13)	(14)	(15)		
CONDUIT SIZE (NO), IN INCHES		E	3	3	2	3	2	3	3	2	3	2	2	3	3	2	3	2	3	3	2	3	2	3	3	2
CONDUIT SERVES		(A)	(D) (H) (J) (K) (L) (M) (N) (O) (P)			(H)	(J)	(D) (K) (L) (M) (N)			(K)	(L)	(D)	(M)			(M)	(N)				(O)	(P)	(O) (P)		
DEVICES	PHASE	NUMBER OF WIRES																								
SIGNAL HEAD PED SIGNAL HEAD PED PB	#14 IMSA 19-1, 42 CONDUCTOR	EXISTING SERVICE TO REMAIN	1					1						1					1					1		
	#14 IMSA 19-1, 7 CONDUCTOR					1					1						1					1				
	#14 IMSA 19-1, 4 CONDUCTOR					5	1				6	1	1				5	1				6	1			
	#8 WHITE THW COMMON, SOLID		1					1						1					1					1		
GROUND	#8 GREEN THW, SOLID		1	1		1	1	1	1		1	1	1	1	1		1	1	1	1		1	1	1	1	
LUMINAIRE	#10 RED THW, SOLID, RED TAPE		1			1		1			1			1			1		1			1		1		
	#10 WHITE THW, SOLID		1			1		1			1			1			1		1			1		1		
PRE-EMPTION	GTT OPTICOM, MODEL 138 DETECTOR CABLE			1																		1			1	
VIDEO DETECTION	ITS+ COAX/POWER CABLING			4		1			2		1				1		1					1			1	
SERVICE	#6 SERVICE (120V/240V)																									
	#6 NEUTRAL (WHITE)																									

CONDUIT & CONDUCTOR NOTES:

1. REFER TO SPECIAL PROVISIONS FOR CONDUIT DEPTHS.
2. CONDUCTORS USED FOR TRAFFIC SIGNAL AND INTERSECTION LIGHTING SHALL CONFORM TO THE REQUIREMENTS OF THE CONDUCTOR TABLES
3. THE IMSA 42, 7, & 4-CONDUCTORS SHALL BE #14 AWG IMSA 19-1. ALL IMSA CONDUCTORS SHALL BE SOLID.
4. THE CONTRACTOR SHALL SUPPLY AND INSTALL ALL CONDUCTORS REQUIRED FOR A COMPLETE AND OPERATIONAL TRAFFIC SIGNAL SYSTEM.
5. THE 42-CONDUCTOR CABLE SHALL RUN FROM THE CONTROLLER TO THE PULLBOXES. ALL IMSA CONDUCTORS SHALL BE SPLICED WITH A BUCHANAN CRIMP (MODEL 2006S) AND SPLICE CAP (MODEL 2007) AND ENCLOSED IN A WATERPROOF ENCLOSURE.
6. ALL CONDUIT RUNS ARE SHOWN SCHEMATICALLY FOR CLARITY. ACTUAL CONDUIT RUN LOCATIONS WILL EXTEND BETWEEN POLES, PULLBOXES, AND CABINETS IN A STRAIGHT FASHION.
7. EMERGENCY VEHICLE PRE-EMPTION (EVP) AND VIDEO DETECTION CAMERA (VDC) DEVICE CABLE SHALL RUN CONTINUOUSLY FROM THE CABINET TO THE EVP.
8. THE CONTRACTOR SHALL BE RESPONSIBLE FOR PROVIDING MULTICOLOR CONDUCTORS WHICH MEET THE COLOR CODING CRITERIA PROVIDED ON SHEET 39.

Contact Arizona 811 at least two full working days before you begin excavation
ARIZONA811 BLUE STAKE, INC.
Call 811 or click Arizona811.com

Registered Professional Engineer (Civil) CERTIFICATE NO. 40957 PAUL J. BALCH Date Signed 10/2/20

DEPARTMENT OF PUBLIC WORKS
CITY OF TEMPE
DIVISION OF ENGINEERING
P.O. BOX 5002 TEMPE, ARIZONA 85280

SURVEYED: REK	DESCRIPTION	DATE 10/2020
DESIGNED: JRH	McCLINTOCK DRIVE WIDENING IMPROVEMENTS CONDUIT & CONDUCTOR SCHEDULE - CAMPUS DR	PROJECT NO. 5408751A
DRAWN: DBB		
CHECKED: PJB		
SCALE: N/A		SHT. 34 OF 44

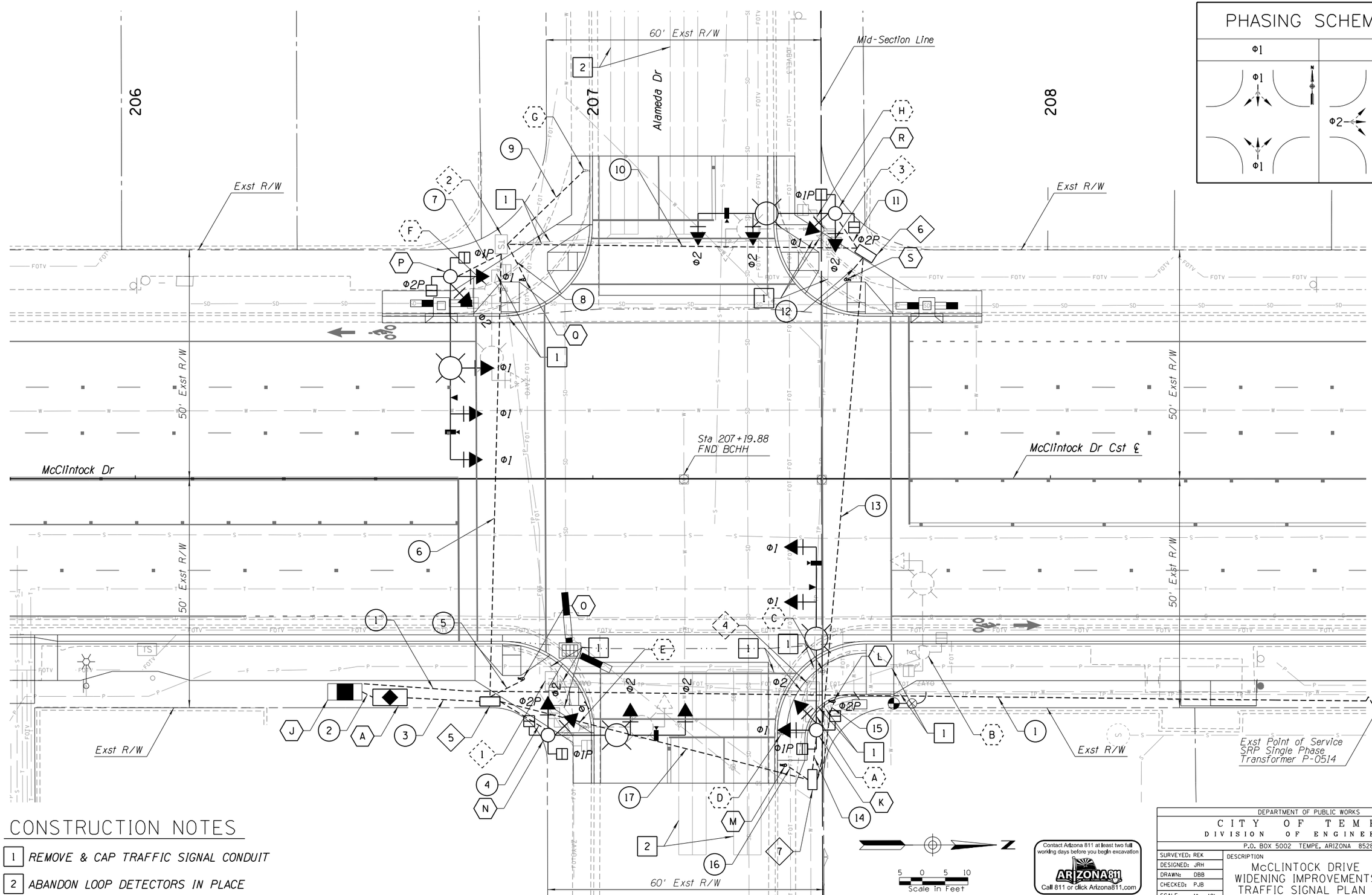

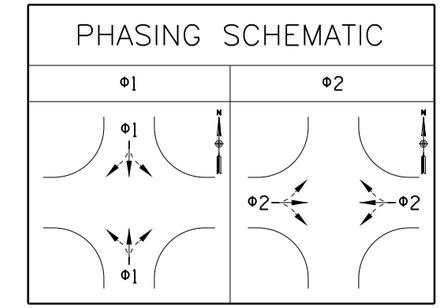

CONSTRUCTION NOTES

1. REMOVE & CAP TRAFFIC SIGNAL CONDUIT
2. ABANDON LOOP DETECTORS IN PLACE

Contact Arizona 811 at least two full working days before you begin excavation
ARIZONA811 BLUE STAKE, INC.
Call 811 or click Arizona811.com

DEPARTMENT OF PUBLIC WORKS CITY OF TEMPE DIVISION OF ENGINEERING P.O. BOX 5002 TEMPE, ARIZONA 85280		
SURVEYED: REK DESIGNED: JRH DRAWN: DBB CHECKED: PJB SCALE: 1" = 10'	DESCRIPTION McCLINTOCK DRIVE WIDENING IMPROVEMENTS TRAFFIC SIGNAL PLAN ALAMEDA DR	DATE 10/2020 PROJECT NO. 5408751A SHT. 35 OF 44

Registered Professional Engineer (Civil) CERTIFICATE NO. 40957 PAUL J. BALCH Date Signed 10/29/20

EQUIPMENT SCHEDULE

TRAFFIC SIGNAL CONTROLLER				REMARKS	LOCATION
CABINET	TYPE	CONTROLLER	FOUNDATION		
A	-	-	DET T1, SHEET 41	REMOVE & RELOCATE ALL EQUIPMENT TO NEW FOUNDATION REMOVE EXST FOUNDATION BACKFILL & COMPACT VOID	207+47.5 51' RT - EXST 206+55.5 48' RT - NEW
J	METERED SERVICE PEDESTAL	MYERS	ADOT STD DET T.S. 2-6	CONSTRUCT FOUNDATION INSTALL NEW SERVICE METER PEDESTAL	206+46 46' RT

POLE		MAST ARM		SIGNALS		P.B. SIGN	REMARKS	LOCATION
NO.	TYPE	SIG.	LUM.	MTG.	FACE			
B	Q MOD	20'	15'	I VII VII	F 2-F 2-PED	ADA PED PB W/SIGN	REMOVE POLE & ALL EQUIPMENT REMOVE FOUNDATION BACKFILL & COMPACT VOID RELOCATE METRO SIGN TO POLE K	207+72 38' RT
C	-	-	-	-	-	ADA PED PB W/SIGN	REMOVE POLE & ALL EQUIPMENT REMOVE FOUNDATION BACKFILL & COMPACT VOID	207+50.5 42' RT
D	-	-	-	-	-	ADA PED PB W/SIGN	REMOVE POLE & ALL EQUIPMENT REMOVE FOUNDATION BACKFILL & COMPACT VOID	207+41.5 56' RT
E	Q	20'	15'	I VII VII	F 2-F 2-PED	ADA PED PB W/SIGN	REMOVE POLE & ALL EQUIPMENT REMOVE FOUNDATION BACKFILL & COMPACT VOID RELOCATE METRO SIGN TO POLE N	206+95.5 54' RT
F	Q	20'	15'	I II VII	F F 2-PED	ADA PED PB W/SIGN	REMOVE POLE & ALL EQUIPMENT REMOVE FOUNDATION BACKFILL & COMPACT VOID RELOCATE METRO SIGN TO POLE P	206+78 42' LT
G	PB 55"	-	-	-	-	ADA PED PB W/SIGN	ADJUST TO GRADE REMOVE & REPLACE BIKE PB, SEE NOTE 2	206+98 68' LT
H	-	-	-	-	-	ADA PED PB W/SIGN	REMOVE POLE & ALL EQUIPMENT REMOVE FOUNDATION BACKFILL & COMPACT VOID RELOCATE METRO SIGN TO POLE R	207+49 55' LT
K	R	40'	20'	II II XI XI XI XI	F F F F PED PED	SEE NOTE 1	INSTALL VDC ON SIGNAL MAST ARM, EQUIPMENT NOTE 8 INSTALL UNI-DIRECTIONAL EVP ON SIGNAL MAST ARM, EQUIPMENT NOTE 10 INSTALL METRO SIGN FROM POLE B	207+49 56' RT
L	PB 55"	-	-	-	-	SEE NOTE 1	-	207+52.5 49' RT
M	PB 55"	-	-	-	-	SEE NOTE 2	-	207+41 62' RT
N	Q	30'	15'	II II XI XI XI XI	F F F F PED PED	-	INSTALL VDC ON SIGNAL MAST ARM, EQUIPMENT NOTE 8 INSTALL METRO SIGN FROM POLE E	206+90 56' RT
O	PB 55"	-	-	-	-	SEE NOTE 1	-	206+84 44' RT
P	R	40'	20'	II II II XI XI XI XI	F F F F F PED PED	-	INSTALL VDC ON SIGNAL MAST ARM, EQUIPMENT NOTE 8 INSTALL UNI-DIRECTIONAL EVP ON SIGNAL MAST ARM, EQUIPMENT NOTE 10 INSTALL METRO SIGN FROM POLE F	206+69 44' LT
Q	PB 55"	-	-	-	-	SEE NOTE 1	-	206+85 44' LT
R	Q	30'	15'	II II XI XI XI XI	F F F F PED PED	-	INSTALL VDC ON SIGNAL MAST ARM, EQUIPMENT NOTE 8 INSTALL METRO SIGN FROM POLE H	207+53 58' LT
S	PB 55"	-	-	-	-	SEE NOTE 1	-	207+55 44' LT

PULLBOX SCHEDULE

NO.	TYPE	LOCATION	REMARKS
1		206+91 44' RT	REMOVE
2		206+80 52' LT	PROTECT IN PLACE
3		207+56 55' LT	REMOVE
4		207+48 46' RT	REMOVE
5	NO. 7 T-453	206+78 49' RT	FURNISH & INSTALL
6	NO. 7 T-453	207+60 49' LT	FURNISH & INSTALL
7	NO. 7 T-453	207+48 66' RT	FURNISH & INSTALL

NOTES:

1. INSTALL CAMPBELL AUDIBLE PUSH BUTTON ASSEMBLY W/REGULATORY SIGN (R10-3E)
2. INSTALL 2" PUSH BUTTON ASSEMBLY W/REGULATORY SIGN (COT STD DET T-577)

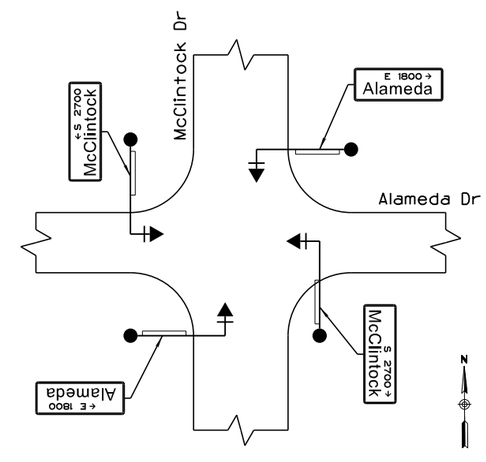

METRO SIGN LAYOUT

Contact Arizona 811 at least two full working days before you begin excavation
ARIZONA811
Call 811 or click Arizona811.com

Registered Professional Engineer (Civil) CERTIFICATE NO. 40957 PAUL J. BALCH Date Signed 10/29/20 Arizona U.S.A.

DEPARTMENT OF PUBLIC WORKS
CITY OF TEMPE
DIVISION OF ENGINEERING
P.O. BOX 5002 TEMPE, ARIZONA 85280

SURVEYED: REK DESIGNED: JRH DRAWN: DBB CHECKED: PJB SCALE: N/A	DESCRIPTION McCLINTOCK DRIVE WIDENING IMPROVEMENTS TRAFFIC SIGNAL EQUIPMENT SCHEDULE - ALAMEDA DR	DATE 10/2020 PROJECT NO. 5408751A SHT. 36 OF 44

CONDUIT & CONDUCTOR SCHEDULE

CONDUIT RUN NO			1	2	3			4	5	6			7	8	9	10			11	12	13			14	15	16	17		
CONDUIT SIZE (NO), IN INCHES			2½	3	3	3	2	3	2	3	3	2	3	2	2	3	3	2	3	2	3	3	2	3	2	2	3	3	2
CONDUIT SERVES			J	A	G, K, L, M, N, O, P, Q, R, S			N	O	G, P, Q, R, S			P	Q	G	R, S			R	S				K	L	M	K, L, M		
DEVICES	PHASE		NUMBER OF WIRES																										
SIGNAL HEAD PED SIGNAL HEAD PED PB	#14 IMSA 19-1, 42 CONDUCTOR	CONDUIT BY CONTRACTOR-CONDUCTORS BY SRP			1					1						1					1						1		
	#14 IMSA 19-1, 7 CONDUCTOR							1					1						1					1					
	#14 IMSA 19-1, 4 CONDUCTOR							5	1				6	1	1				5	1				5	1	1			
	#8 WHITE THW COMMON, SOLID				1					1						1					1						1		
GROUND	#8 GREEN THW, SOLID		1	1	1	1		1	1	1	1		1	1	1	1	1		1	1	1	1		1	1	1	1	1	
LUMINAIRE	#10 RED THW, SOLID, RED TAPE		1	1				1		1			1			1			1		1			1			1		
	#10 WHITE THW, SOLID		1	1				1		1			1			1			1		1			1			1		
PRE-EMPTION	GTT OPTICOM, MODEL 138 DETECTOR CABLE				2						1		1											1				1	
VIDEO DETECTION	ITS+ COAX/POWER CABLING				4			1			2		1				1		1					1				1	
SERVICE	#6 SERVICE (120V/240V)		1																										
	#6 NEUTRAL (WHITE)		1																										

CONDUIT & CONDUCTOR NOTES:

1. REFER TO SPECIAL PROVISIONS FOR CONDUIT DEPTHS.
2. CONDUCTORS USED FOR TRAFFIC SIGNAL AND INTERSECTION LIGHTING SHALL CONFORM TO THE REQUIREMENTS OF THE CONDUCTOR TABLES
3. THE IMSA 42, 7, & 4-CONDUCTORS SHALL BE #14 AWG IMSA 19-1. ALL IMSA CONDUCTORS SHALL BE SOLID.
4. THE CONTRACTOR SHALL SUPPLY AND INSTALL ALL CONDUCTORS REQUIRED FOR A COMPLETE AND OPERATIONAL TRAFFIC SIGNAL SYSTEM.
5. THE 42-CONDUCTOR CABLE SHALL RUN FROM THE CONTROLLER TO THE PULLBOXES. ALL IMSA CONDUCTORS SHALL BE SPLICED WITH A BUCHANAN CRIMP (MODEL 2006S) AND SPLICE CAP (MODEL 2007) AND ENCLOSED IN A WATERPROOF ENCLOSURE.
6. ALL CONDUIT RUNS ARE SHOWN SCHEMATICALLY FOR CLARITY. ACTUAL CONDUIT RUN LOCATIONS WILL EXTEND BETWEEN POLES, PULLBOXES, AND CABINETS IN A STRAIGHT FASHION.
7. EMERGENCY VEHICLE PRE-EMPTION (EVP) AND VIDEO DETECTION CAMERA (VDC) DEVICE CABLE SHALL RUN CONTINUOUSLY FROM THE CABINET TO THE EVP.
8. THE CONTRACTOR SHALL BE RESPONSIBLE FOR PROVIDING MULTICOLOR CONDUCTORS WHICH MEET THE COLOR CODING CRITERIA PROVIDED ON SHEET 39.

Contact Arizona 811 at least two full working days before you begin excavation
ARIZONA811 BLUE STAKE, INC.
Call 811 or click Arizona811.com

Registered Professional Engineer (Civil) CERTIFICATE NO. 40957 PAUL J. BALCH Date Signed 10/29/20

DEPARTMENT OF PUBLIC WORKS
CITY OF TEMPE
DIVISION OF ENGINEERING
P.O. BOX 5002 TEMPE, ARIZONA 85280

SURVEYED: REK	DESCRIPTION	DATE 10/2020
DESIGNED: JRH	McCLINTOCK DRIVE WIDENING IMPROVEMENTS CONDUIT & CONDUCTOR SCHEDULE - ALAMEDA DR	PROJECT NO. 5408751A
DRAWN: DBB		
CHECKED: PJB		
SCALE: N/A		SHT. 37 OF 44

PAVEMENT MARKING LEGEND

4BW40	4" White Line (10' Stripe, 30' Space) w/Type G RPMs @ 40' Spacing
8DW	8" Dashed White Line (2' Stripe, 4' Space)
8SW	8" Solid White Line
8SW20	8" Solid White Line w/Type G RPMs @ 20' Spacing
12SW	12" Solid White Line
18SW	18" Solid White Line
4DY	4" Double Yellow
4DY20	4" Double Yellow w/Type D RPMs @ 20' Spacing
4SBY	4" Double Yellow Line One Solid & One Broken (10' Line, 30' Gap) w/Type D RPMs @ 40' Spacing

PAVEMENT MARKING KEYED NOTES

1. Turn Lane Pavement Marking Symbol
2. Bike Lane Pavement Symbols
3. Pavement Marking Legend (ONLY)

PAVEMENT MARKING GENERAL NOTES

1. THE CONTRACTOR SHALL BE RESPONSIBLE FOR THE LAYOUT AND INSTALLATION OF PERMANENT PAVEMENT MARKINGS ON THE FINAL SURFACE COURSE FOLLOWING CONTROL POINTS THAT HAVE BEEN SET NO MORE THAN 50 FEET APART ALONG THE LINES TO BE STRIPED.
2. AT THE COMPLETION OF THE FINAL PAVEMENT SURFACE EACH DAY, CENTER LINES, LANE LINES, AND STOP BARS SHALL BE STRIPED WITH ONE APPLICATION OF STANDARD REFLECTORIZED TRAFFIC PAINT AT THE LOCATIONS OF THE PERMANENT STRIPING. THE PAINT SHALL HAVE A MAXIMUM THICKNESS OF 10 MILS WET (5 MILS DRY).
3. THE FINAL STRIPING SHALL BE 90 MIL (0.090 INCHES) THICK RIBBON EXTRUDED THERMOPLASTIC REFLECTORIZED STRIPING PLACED OVER THE INITIAL STRIPING AS DIRECTED BY THE ENGINEER.
4. THE FINAL STOP BARS, SINGLE ARROWS, AND BIKE SYMBOLS SHALL BE WHITE 90 MIL (0.090 INCHES) THICK ALKYD EXTRUDED THERMOPLASTIC REFLECTORIZED MARKINGS.
5. ALL EXISTING PAVEMENT MARKINGS IN CONFLICT WITH THE PROPOSED PAVEMENT MARKINGS SHALL BE REMOVED BY APPROVED METHODS.
6. AFTER STRIPING OBLITERATION, THE ENTIRE ROADWAY WIDTH WITHIN THE PROJECT LIMITS WILL BE MICROSEALED PRIOR TO INSTALLATION OF THE FINAL STRIPING.
7. CHEVRONS WITHIN THE BUFFER BETWEEN TRAVEL LANE AND BIKE LANE SHALL BE SPACED EVERY 20'.CHEVRONS SHALL BE ROTATED 240 DEGREES COUNTER-CLOCKWISE FROM THE DIRECTION OF TRAVEL.

SIGNING GENERAL NOTES

1. SIGN POSTS AND FOUNDATIONS SHALL BE IN ACCORDANCE WITH ADOT SPECIFICATION SECTION 607.
2. SIGN POSTS SHALL BE SINGLE 2-INCH PERFORATED SIGN POSTS PER ADOT STANDARD DRAWING NO. S-3.
3. FOUNDATIONS SHALL BE PER ADOT STANDARD DRAWING NO. S-1.
4. THE SIGN LOCATIONS ARE APPROXIMATE. THE CONTRACTOR SHALL VERIFY THE SIGN LOCATIONS WITH THE ENGINEER PRIOR TO INSTALLING SIGNS.
5. THE BOTTOM OF EACH SIGN SHALL BE AT LEAST 7 FEET ABOVE THE NEAREST EDGE OF PAVEMENT AND AT LEAST 7 FEET ABOVE THE GROUND UNDER THE SIGN.
6. OFFSETS FOR ALL SIGNS SHALL BE MEASURED FROM THE EDGE OF THE ROADWAY TO THE NEAREST EDGE OF THE SIGN.
7. THE CONTRACTOR SHALL PRESERVE ALL ROADWAY SIGNS AND SIGN SUPPORTS. THE CONTRACTOR SHALL REPLACE ANY SIGNS OR SIGN SUPPORTS DAMAGED AS A RESULT OF THE CONSTRUCTION AT NO ADDITIONAL COST TO THE CITY.

APPROXIMATE PAVEMENT MARKING QUANTITIES

Item Description	*Unit*	*Quantities*
Obliterate Pavement Marking	L.Ft.	68,320
White Stripe 90 Mil Thermoplastic (4" Equiv)	L.Ft.	32,990
Yellow stripe 90 Mil Thermoplastic (4" Equiv)	L.Ft.	9,560
White Stripe Paint (4" Equiv)	L.Ft.	16,290
Yellow Stripe Paint (4" Equiv)	L.Ft.	7,830
Obliterate Pavement Marking Symbol	Each	25
Pavement Marking Turn Lane Arrow Symbol, Thermoplastic	Each	13
Pavement Marking Legend (ONLY), Thermoplastic	Each	1
Pavement Marking Bike Lane Symbol, Thermoplastic	Each	17
Pavement Marking Bike Lane Arrow, Thermoplastic	Each	17
Pavement Marking Legend and Symbol, Paint	Each	48
Raised Pavement Marker, Type "D" (ADOT M-19)	Each	210
Raised Pavement Marker, Type "G" (ADOT M-19)	Each	400
Raised Pavement Marker, Type "BB" (ADOT M-19)	Each	7

Contact Arizona 811 at least two full working days before you begin excavation
ARIZONA811 BLUE STAKE, INC.
Call 811 or click Arizona811.com

Registered Professional Engineer (Civil) CERTIFICATE NO. 40957 PAUL J. BALCH Date Signed 10/29/20 ARIZONA U.S.A.

DEPARTMENT OF PUBLIC WORKS
CITY OF TEMPE
DIVISION OF ENGINEERING
P.O. BOX 5002 TEMPE, ARIZONA 85280

SURVEYED: REK	DESCRIPTION	DATE 10/2020
DESIGNED: JRH	McCLINTOCK DRIVE WIDENING IMPROVEMENTS PAVEMENT MARKING NOTES & LEGEND	PROJECT NO. 5408751A
DRAWN: DBB		
CHECKED: PJB		
SCALE: N/A		SHT. 38 OF 44

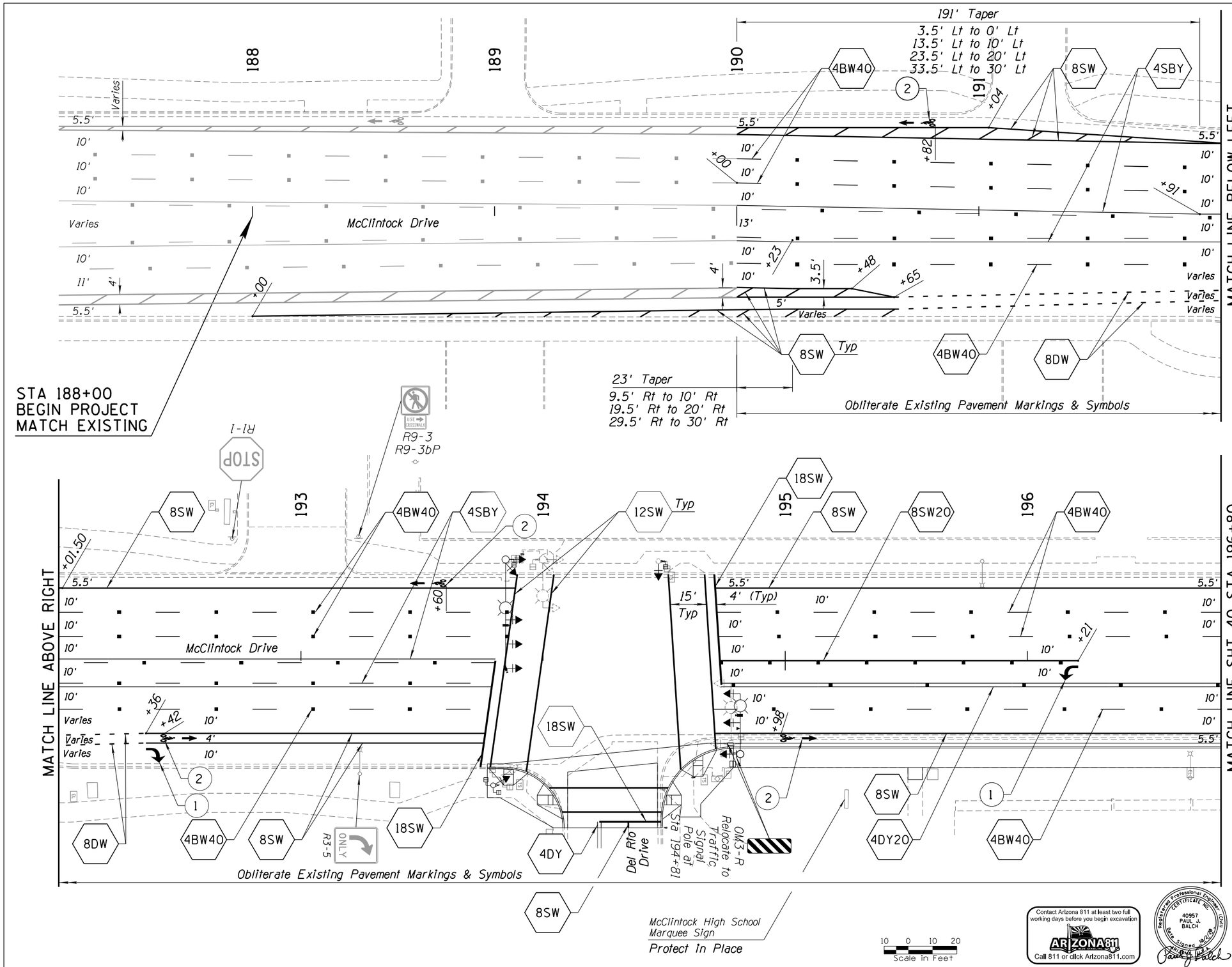

NOTE:

RPM DEPICTION IN PLAN VIEW IS SCHEMATIC IN NATURE. WHEN CONSTRUCTED, CONTRACTOR SHALL ALIGN RPMs OF PARALLEL STRIPES AT EQUIVALENT STATIONS ALONG THE CONSTRUCTION CENTERLINE AS APPROPRIATE FOR THE DESIGNATED RPM SPACING.

OBLITERATE ALL EXISTING PAVEMENT MARKINGS AND SYMBOLS FROM STA 190+00 TO STA 196+80 PRIOR TO PLACING MICROSEAL PAVEMENT TREATMENT.

Contact Arizona 811 at least two full working days before you begin excavation
ARIZONA811 BLUE STAKE, INC.
Call 811 or click Arizona811.com

Registered Professional Engineer (Civil)
CERTIFICATE NO. 40957
PAUL J. BALCH
Date Signed 10/29/20
ARIZONA U.S.A.

DEPARTMENT OF PUBLIC WORKS
CITY OF TEMPE
DIVISION OF ENGINEERING
P.O. BOX 5002 TEMPE, ARIZONA 85280

SURVEYED: REK	DESCRIPTION	DATE 10/2020
DESIGNED: JRH	McCLINTOCK DRIVE WIDENING IMPROVEMENTS PAVEMENT MARKING PLAN	PROJECT NO. 5408751A
DRAWN: DBB		
CHECKED: PJB		
SCALE: 1" = 20'		SHT. 39 OF 44

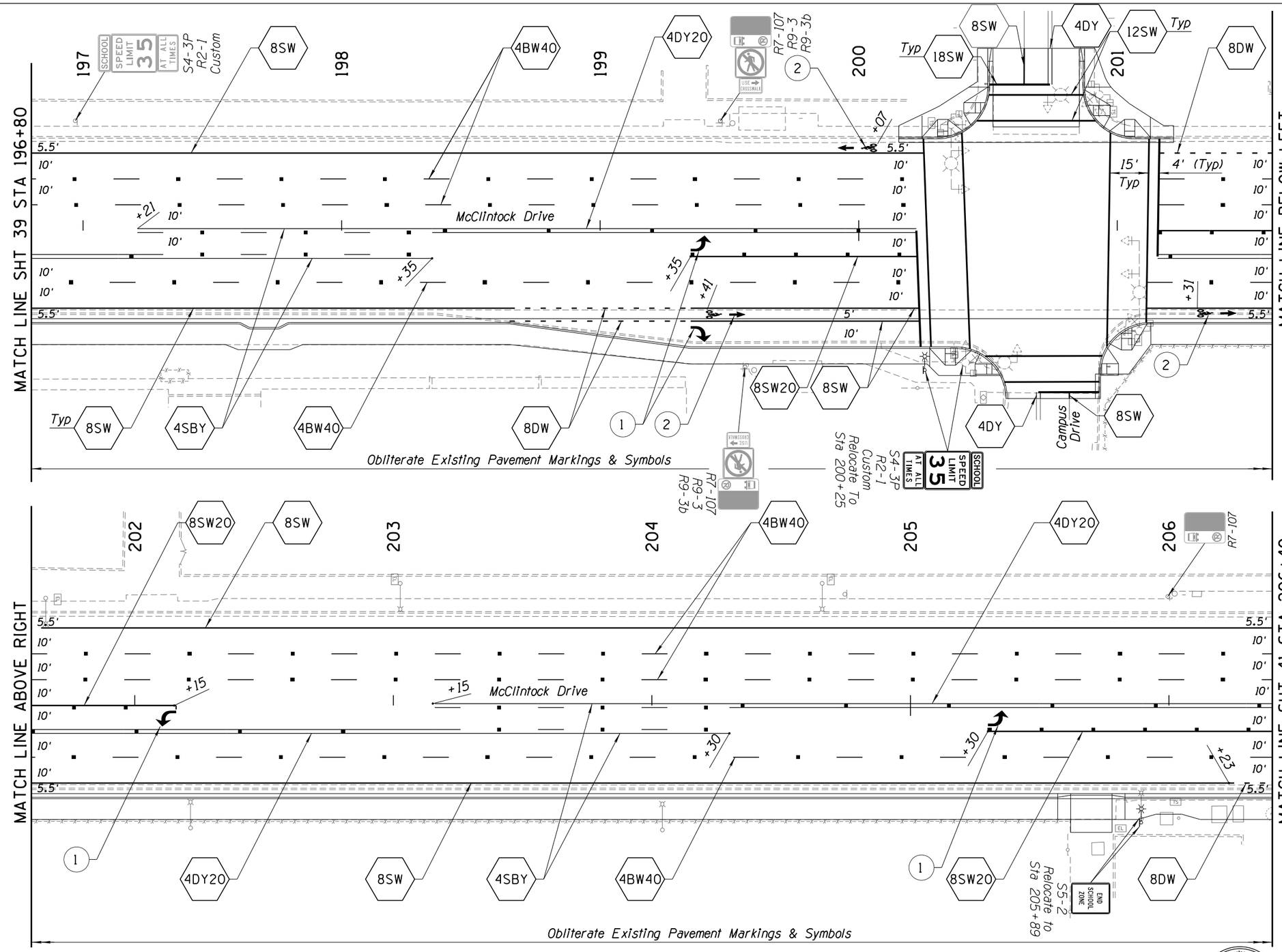

NOTE:

RPM DEPICTION IN PLAN VIEW IS SCHEMATIC IN NATURE. WHEN CONSTRUCTED, CONTRACTOR SHALL ALIGN RPMs OF PARALLEL STRIPES AT EQUIVALENT STATIONS ALONG THE CONSTRUCTION CENTERLINE AS APPROPRIATE FOR THE DESIGNATED RPM SPACING.

OBLITERATE ALL EXISTING PAVEMENT MARKINGS AND SYMBOLS FROM STA 196+80 TO STA 206+40 PRIOR TO PLACING MICROSEAL PAVEMENT TREATMENT.

10 0 10 20
Scale in Feet

Contact Arizona 811 at least two full working days before you begin excavation
ARIZONA811
Call 811 or click Arizona811.com

Registered Professional Engineer (Civil) CERTIFICATE NO. 40957 PAUL J. BALCH Date Signed 10/29/20

DEPARTMENT OF PUBLIC WORKS
CITY OF TEMPE
DIVISION OF ENGINEERING
P.O. BOX 5002 TEMPE, ARIZONA 85280

SURVEYED: REK	DESCRIPTION	DATE 10/2020
DESIGNED: JRH	McCLINTOCK DRIVE WIDENING IMPROVEMENTS PAVEMENT MARKING PLAN	PROJECT NO. 5408751A
DRAWN: DBB		
CHECKED: PJB		
SCALE: 1" = 20'		SHT. 40 OF 44

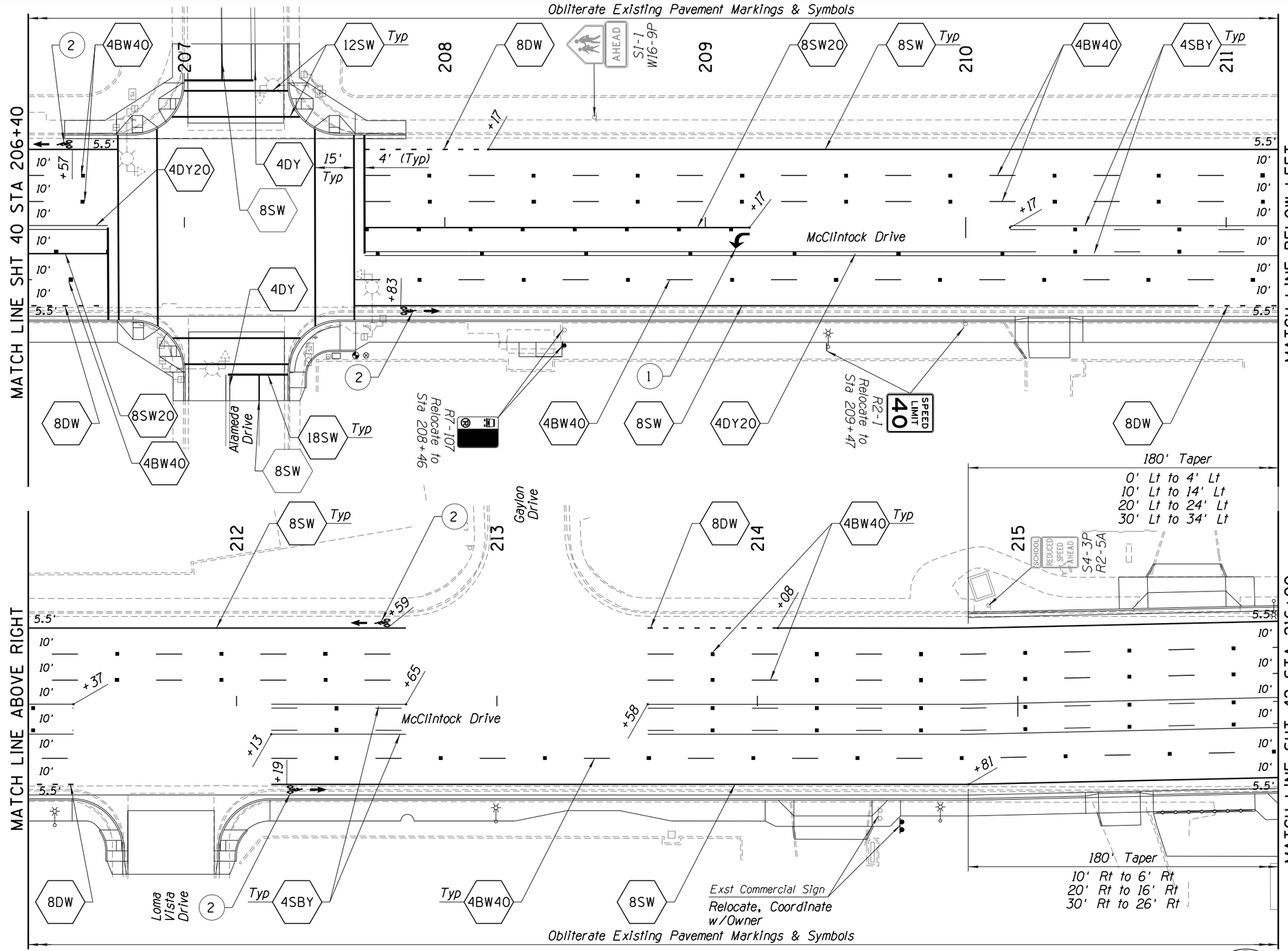

NOTE:

RPM DEPICTION IN PLAN VIEW IS SCHEMATIC IN NATURE. WHEN CONSTRUCTED, CONTRACTOR SHALL ALIGN RPMs OF PARALLEL STRIPES AT EQUIVALENT STATIONS ALONG THE CONSTRUCTION CENTERLINE AS APPROPRIATE FOR THE DESIGNATED RPM SPACING.

OBLITERATE ALL EXISTING PAVEMENT MARKINGS AND SYMBOLS FROM STA 206+40 TO STA 216+00 PRIOR TO PLACING MICROSEAL PAVEMENT TREATMENT.

10 0 10 20
Scale in Feet

Contact Arizona 811 at least two full working days before you begin excavation
ARIZONA811 BLUE STAKE, INC.
Call 811 or click Arizona811.com

Registered Professional Engineer (Civil)
CERTIFICATE NO. 40957
PAUL J. BALCH
Date Signed 10/29/20
ARIZONA U.S.A.

DEPARTMENT OF PUBLIC WORKS
CITY OF TEMPE
DIVISION OF ENGINEERING
P.O. BOX 5002 TEMPE, ARIZONA 85280

SURVEYED: REK	DESCRIPTION	DATE 10/2020
DESIGNED: JRH	McCLINTOCK DRIVE WIDENING IMPROVEMENTS PAVEMENT MARKING PLAN	PROJECT NO. 5408751A
DRAWN: DBB		
CHECKED: PJB		
SCALE: 1" = 20'		SHT. 41 OF 44

10/29/2020 J:\2015\1015020.08 MCCLINTOCK DRIVE WIDENING IMPROVEMENTS\CAD_SOUTH\15020_08-SM.DGN

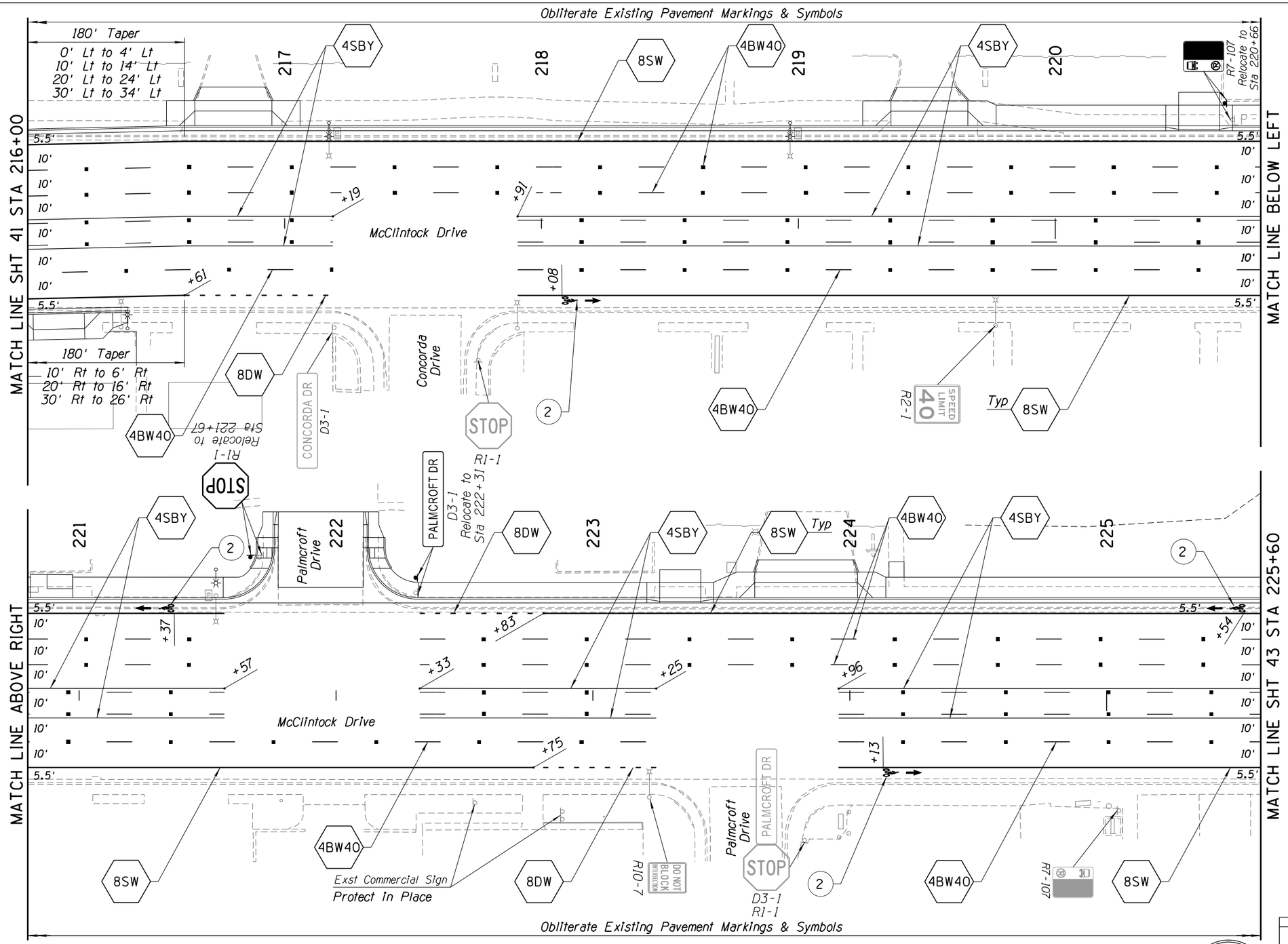

NOTE:

RPM DEPICTION IN PLAN VIEW IS SCHEMATIC IN NATURE. WHEN CONSTRUCTED, CONTRACTOR SHALL ALIGN RPMs OF PARALLEL STRIPES AT EQUIVALENT STATIONS ALONG THE CONSTRUCTION CENTERLINE AS APPROPRIATE FOR THE DESIGNATED RPM SPACING.

OBLITERATE ALL EXISTING PAVEMENT MARKINGS AND SYMBOLS FROM STA 216+00 TO STA 225+60 PRIOR TO PLACING MICROSEAL PAVEMENT TREATMENT.

10 0 10 20
Scale in Feet

Contact Arizona 811 at least two full working days before you begin excavation
ARIZONA811 BLUE STAKE, INC.
Call 811 or click Arizona811.com

Registered Professional Engineer (Civil) CERTIFICATE NO. 40957 PAUL J. BALCH Date Signed 10/29/20 ARIZONA U.S.A.

DEPARTMENT OF PUBLIC WORKS
CITY OF TEMPE
DIVISION OF ENGINEERING
P.O. BOX 5002 TEMPE, ARIZONA 85280

SURVEYED: REK	DESCRIPTION	DATE 10/2020
DESIGNED: JRH	McCLINTOCK DRIVE WIDENING IMPROVEMENTS PAVEMENT MARKING PLAN	PROJECT NO. 5408751A
DRAWN: DBB		
CHECKED: PJB		
SCALE: 1" = 20'		SHT. 42 OF 44

10/29/2020 J:\2015\1015020.08 MCCLINTOCK DRIVE WIDENING IMPROVEMENTS\CAD_SOUTH\15020_08-SM.DGN

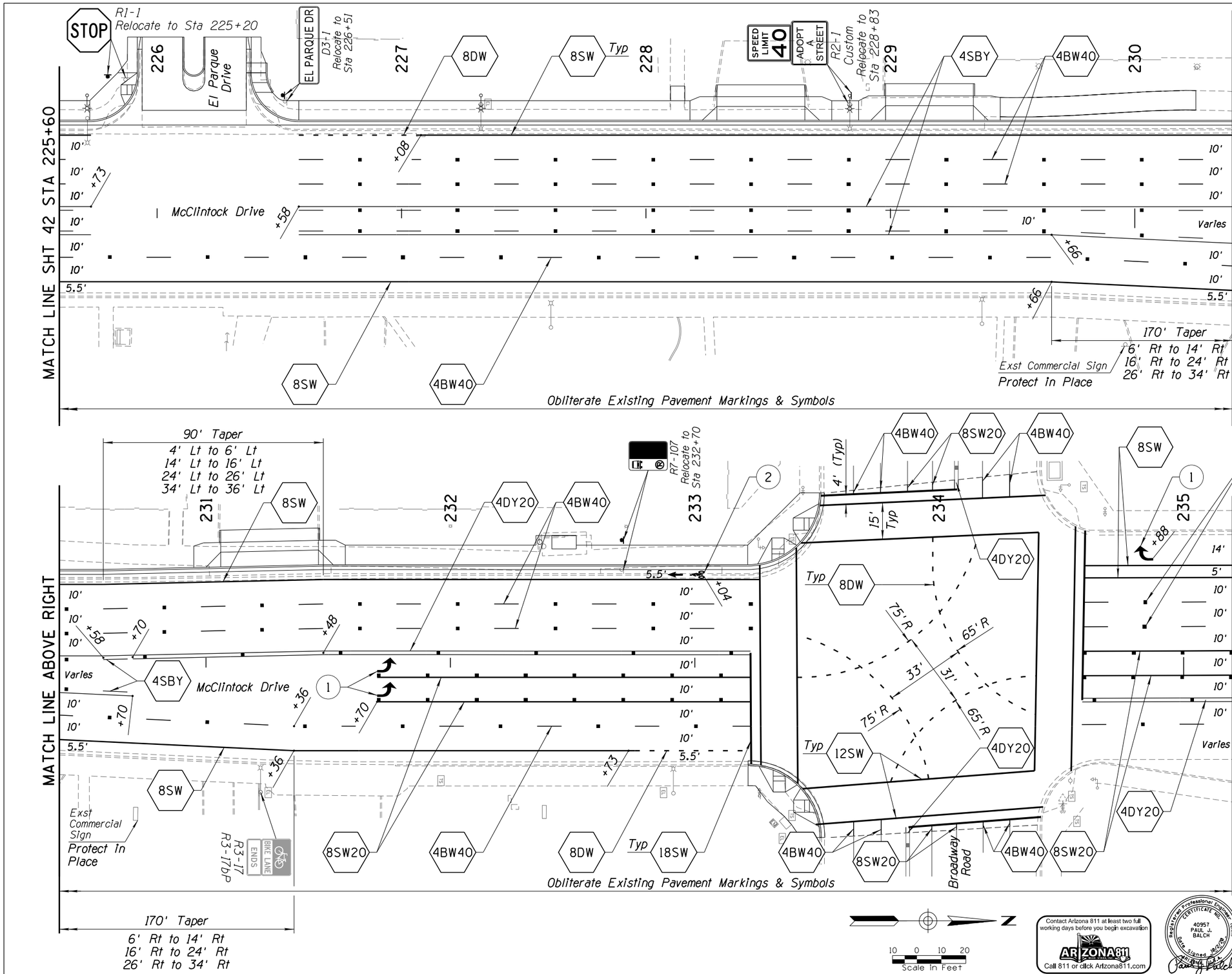

NOTE:

RPM DEPICTION IN PLAN VIEW IS SCHEMATIC IN NATURE. WHEN CONSTRUCTED, CONTRACTOR SHALL ALIGN RPMs OF PARALLEL STRIPES AT EQUIVALENT STATIONS ALONG THE CONSTRUCTION CENTERLINE AS APPROPRIATE FOR THE DESIGNATED RPM SPACING.

OBLITERATE ALL EXISTING PAVEMENT MARKINGS AND SYMBOLS FROM STA 225+60 TO STA 235+20 PRIOR TO PLACING MICROSEAL PAVEMENT TREATMENT.

Contact Arizona 811 at least two full working days before you begin excavation
ARIZONA811 Blue Stake, Inc.
Call 811 or click Arizona811.com

Registered Professional Engineer (Civil) CERTIFICATE NO. 40957 PAUL J. BALCH Date Signed 10/29/20 Arizona U.S.A.

DEPARTMENT OF PUBLIC WORKS
CITY OF TEMPE
DIVISION OF ENGINEERING
P.O. BOX 5002 TEMPE, ARIZONA 85280

SURVEYED: REK	DESCRIPTION	DATE 10/2020
DESIGNED: JRH	McCLINTOCK DRIVE WIDENING IMPROVEMENTS PAVEMENT MARKING PLAN	PROJECT NO. 5408751A
DRAWN: DBB		
CHECKED: PJB		
SCALE: 1" = 20'		SHT. 43 OF 44

10/29/2020 J:\2015\1015020.08 MCCLINTOCK DRIVE WIDENING IMPROVEMENTS\CAD_SOUTH\15020_08-SM.DGN

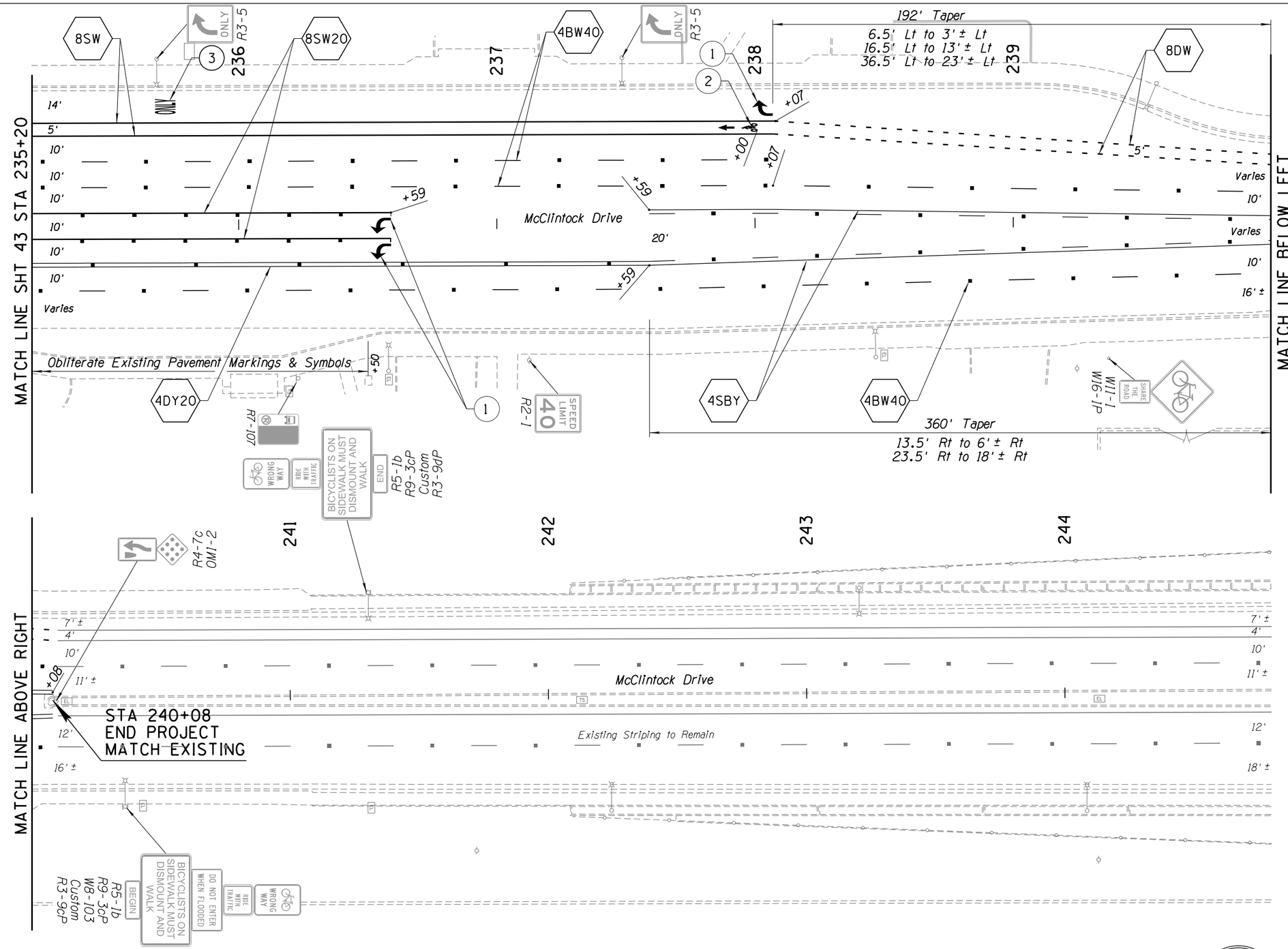

NOTE:

RPM DEPICTION IN PLAN VIEW IS SCHEMATIC IN NATURE. WHEN CONSTRUCTED, CONTRACTOR SHALL ALIGN RPMs OF PARALLEL STRIPES AT EQUIVALENT STATIONS ALONG THE CONSTRUCTION CENTERLINE AS APPROPRIATE FOR THE DESIGNATED RPM SPACING.

OBLITERATE ALL EXISTING PAVEMENT MARKINGS AND SYMBOLS FROM STA 235+20 TO STA 236+50 PRIOR TO PLACING MICROSEAL PAVEMENT TREATMENT.

10 0 10 20
Scale in Feet

Contact Arizona 811 at least two full working days before you begin excavation
ARIZONA811 BLUE STAKE, INC.
Call 811 or click Arizona811.com

Registered Professional Engineer (Civil)
CERTIFICATE NO. 40957
PAUL J. BALCH
Date Signed 10/29/20
Arizona, U.S.A.

DEPARTMENT OF PUBLIC WORKS
CITY OF TEMPE
DIVISION OF ENGINEERING
P.O. BOX 5002 TEMPE, ARIZONA 85280

SURVEYED: REK	DESCRIPTION	DATE 10/2020
DESIGNED: JRH	McCLINTOCK DRIVE WIDENING IMPROVEMENTS PAVEMENT MARKING PLAN	PROJECT NO. 5408751A
DRAWN: DBB		
CHECKED: PJB		
SCALE: 1" = 20'		SHT. 44 OF 44

10/29/2020 J:\2015\1015020.08 MCCLINTOCK DRIVE WIDENING IMPROVEMENTS\CAD_SOUTH\15020_08-SM.DGN