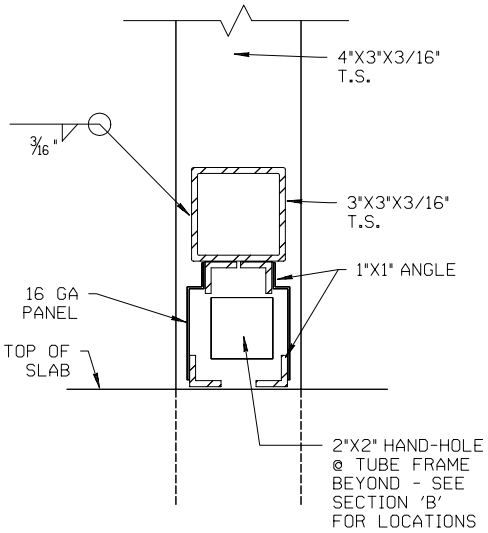

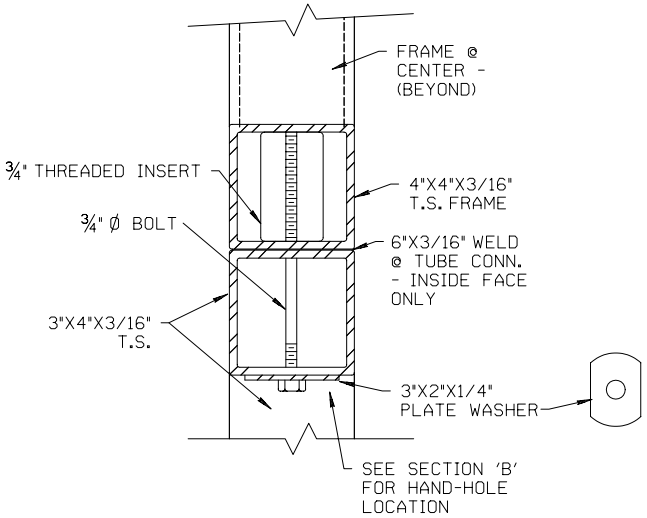

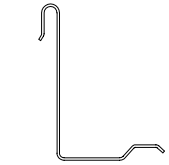

CONTINUOUS CEE RIB
OR CEE CLIP SECTION

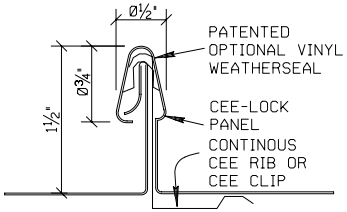

SEAM SECTION

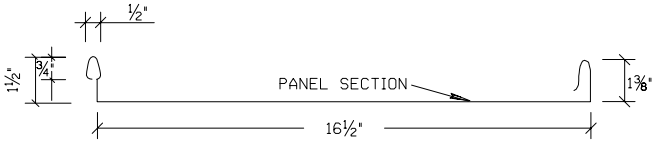

U.L. RATING: NO. 580
"TEST FOR WIND UPLIFT
RESISTANCE OF ROOF
ASSEMBLIES" - CLASS UL90
#334 & 381

7	KICK PLATE ACCESS PANEL	8	CONNECTION @ ROOF STRUCTURE	9	CEE - LOCK ROOF PANEL N.T.S.

ORIGINAL SIGNATURE ON FILE
AT THE CITY OF TEMPE

APPROVED: _____ _____
DEPUTY PUBLIC WORKS MANAGER
TRANSPORTATION
DATE

APPROVED: _____ _____
DEPUTY PUBLIC WORKS MANAGER
CITY ENGINEER
DATE

CITY OF TEMPE PUBLIC WORKS DEPARTMENT	STANDARD BUS SHELTER CONNECTION DETAILS 7-9	ASSEMBLY DRAWING ONLY SPECS AND DESIGN BY REID & ASSOCIATES TEMPE, AZ	DETAIL T-654 7 OF 12 REVISED 2001