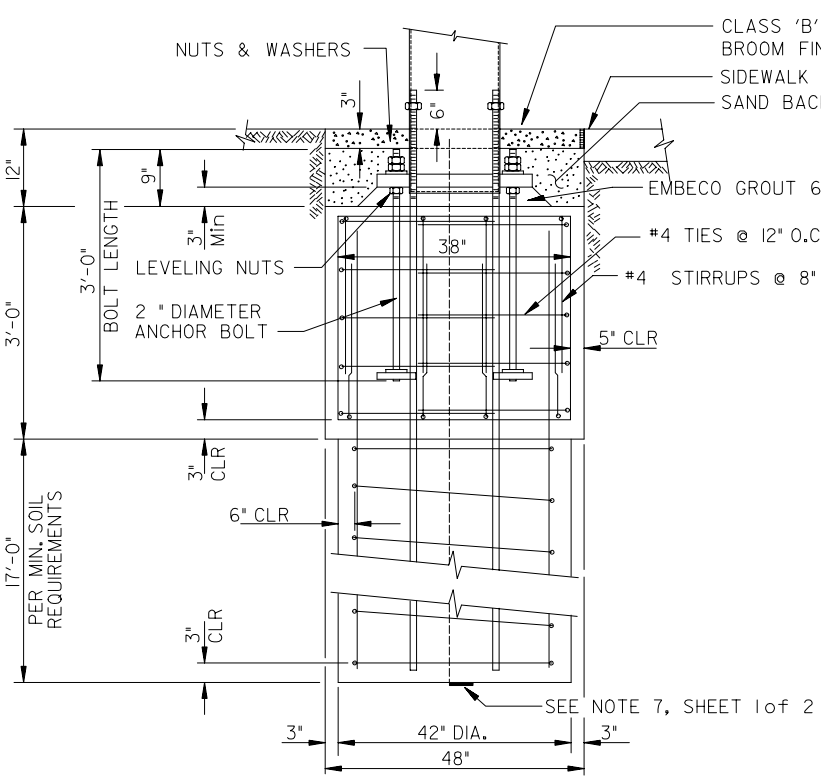

END VIEW SECTION

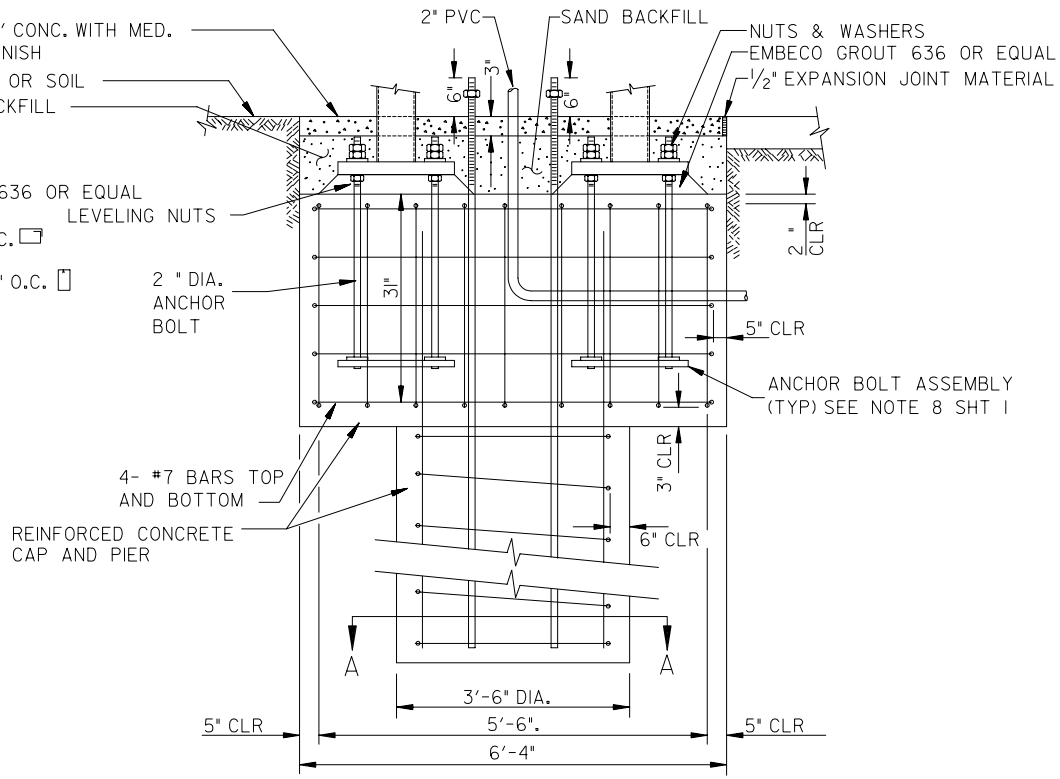

SIDE VIEW SECTION

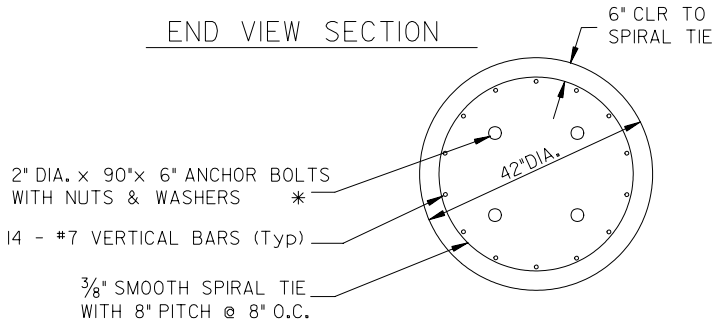

SECTION A - A

✳ BOLTS FOR INTERIM SIGNAL ERECTION MAY BE DELETED AT ENGINEER'S DIRECTION.

APPROVED: _____ _____
DEPUTY PUBLIC WORKS MANAGER
CITY ENGINEER
DATE

APPROVED: _____ _____
TRAFFIC ENGINEER
DATE

CITY OF TEMPE PUBLIC WORKS DEPARTMENT	TRAFFIC SIGNAL FOUNDATION DETAIL FOR MODULAR 50 MAST ARM STRUCTURE	ASSEMBLY DRAWING ONLY SPECS AND DESIGN BY T.A. CAID INDUSTRIES, INC TUCSON, AZ	DETAIL T-573 SHEET 2 OF 2 REVISED 2007