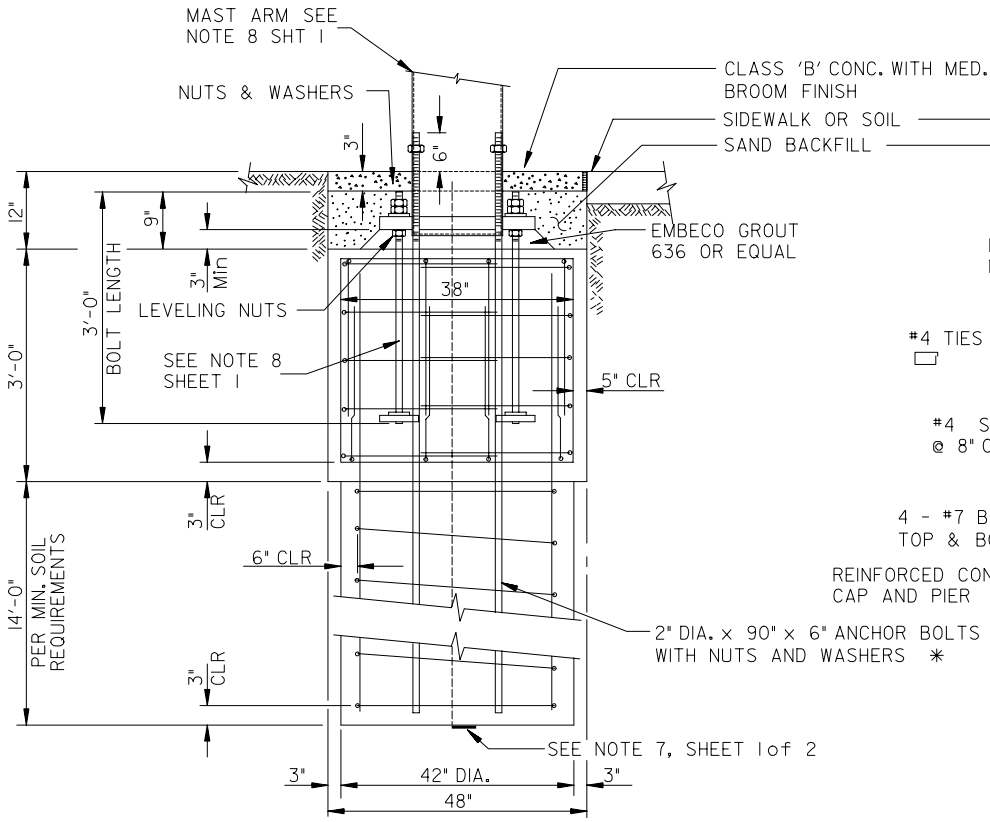

END VIEW SECTION

N.T.S.

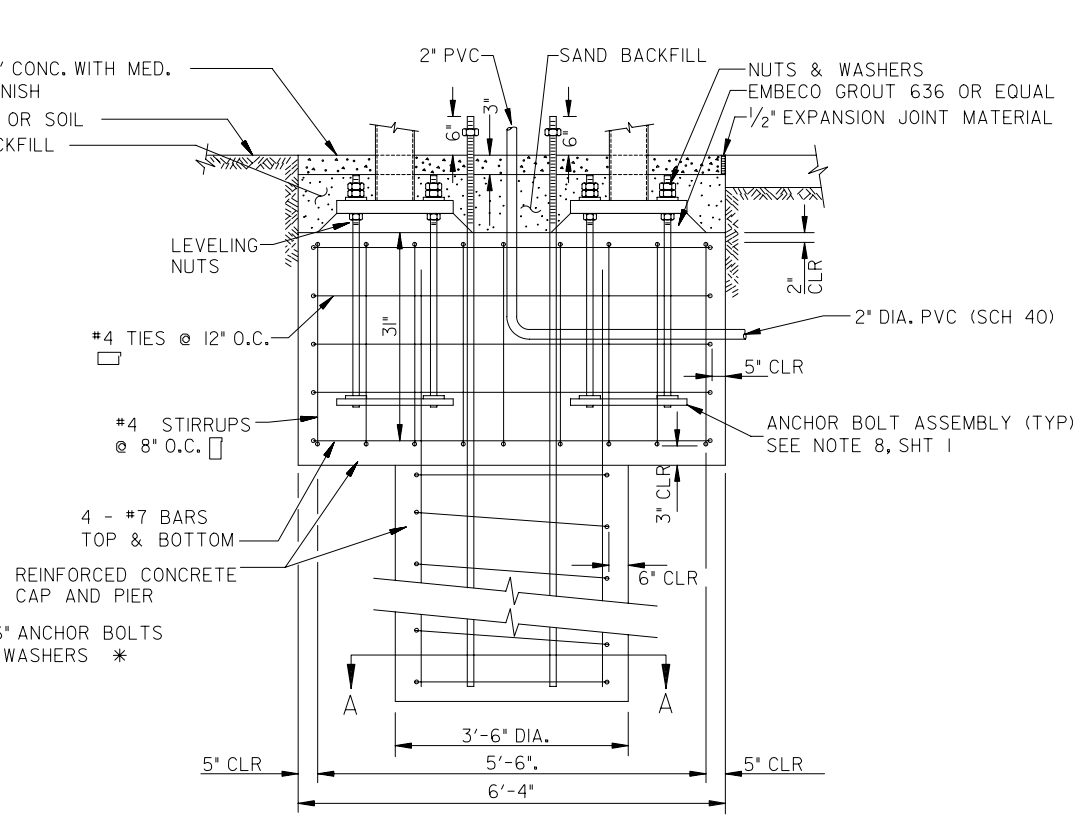

SIDE VIEW SECTION

N.T.S.

✳ BOLTS FOR INTERIM SIGNAL ERECTION MAY BE DELETED AT ENGINEER'S DIRECTION.

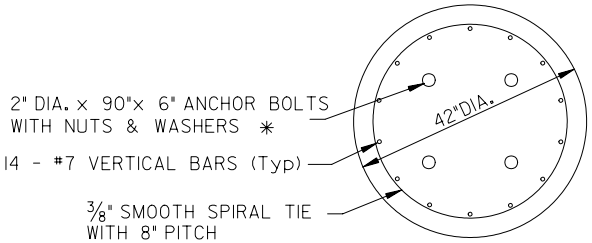

SECTION A - A

N.T.S.

APPROVED: _____ _____
DEPUTY PUBLIC WORKS MANAGER CITY ENGINEER — DATE

APPROVED: _____ _____
TRAFFIC ENGINEER — DATE

CITY OF TEMPE PUBLIC WORKS DEPARTMENT	TRAFFIC SIGNAL FOUNDATION DETAIL FOR MODULAR 45 MAST ARM STRUCTURE	ASSEMBLY DRAWING ONLY SPECS AND DESIGN BY T.A. CAID INDUSTRIES, INC TUCSON, AZ	DETAIL T-572 SHEET 2 OF 2 REVISED 2007