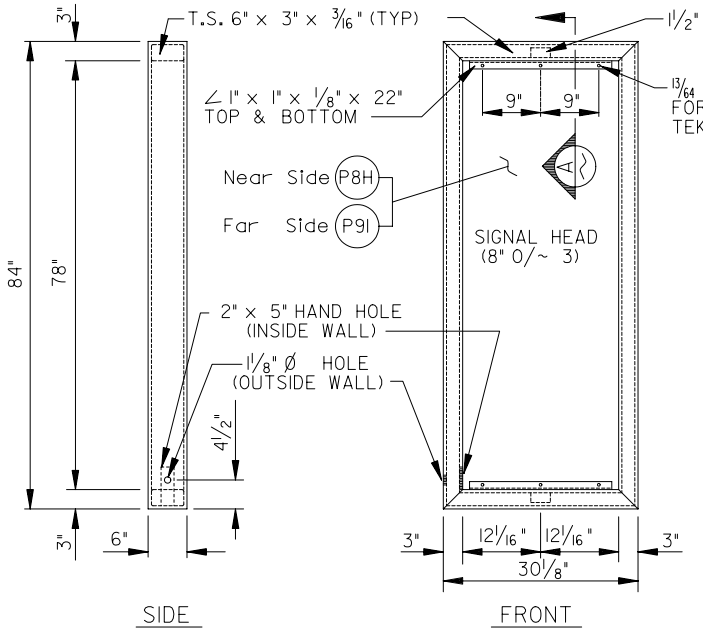

ADD-ON STRUCTURE 1

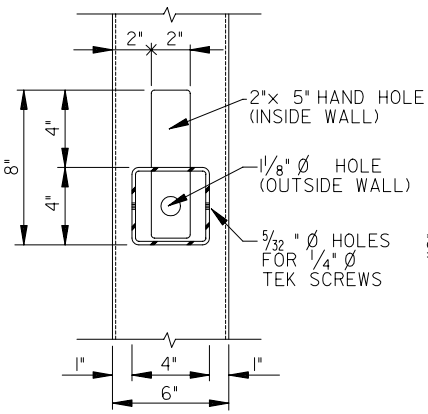

SECTION B

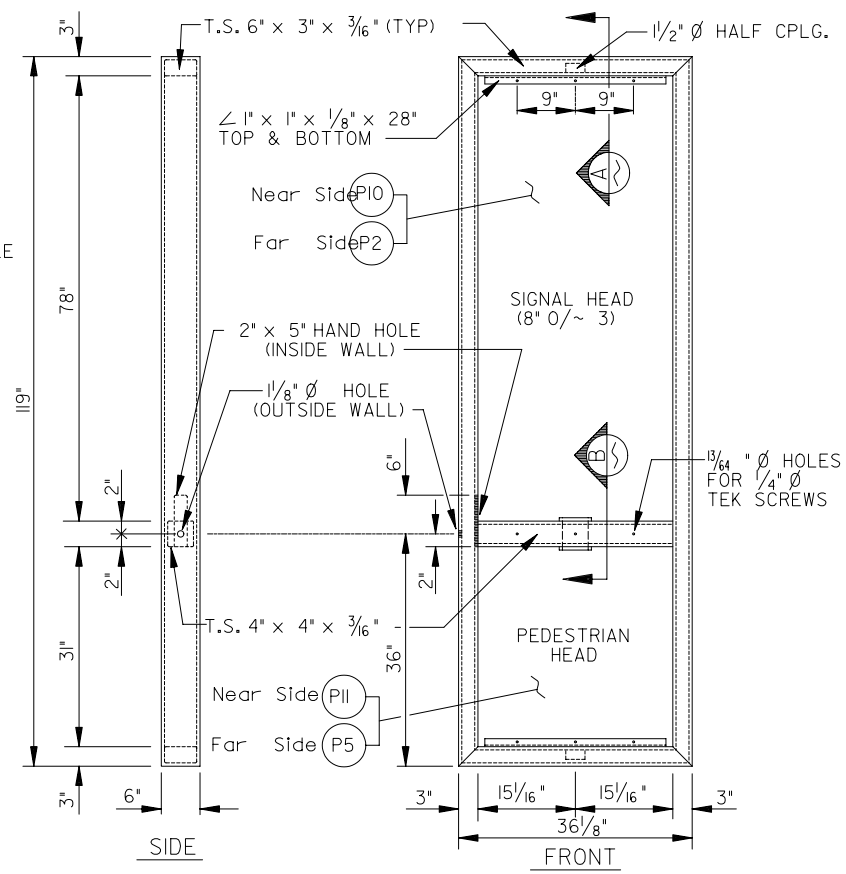

ADD-ON STRUCTURE 3

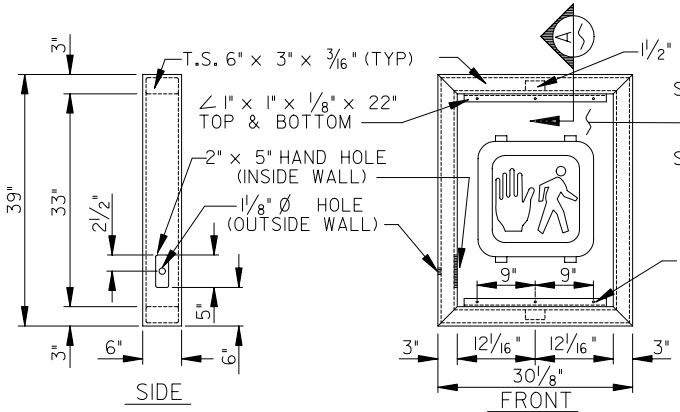

ADD-ON STRUCTURE 2

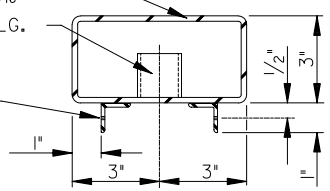

TYPICAL SECTION A
(TOP & BOTTOM)

ORIGINAL SIGNATURE ON FILE
AT THE CITY OF TEMPE

APPROVED: _____ _____
DEPUTY PUBLIC WORKS MANAGER TRANSPORTATION — DATE

APPROVED: _____ _____
DEPUTY PUBLIC WORKS MANAGER CITY ENGINEER — DATE

CITY OF TEMPE PUBLIC WORKS DEPARTMENT	MODULAR SIGNAL ADD-ON STRUCTURES	ASSEMBLY DRAWING ONLY SPECS AND DESIGN BY T.A. CAID INDUSTRIES, INC TUCSON, AZ	DETAIL T-561 REVISED 2001