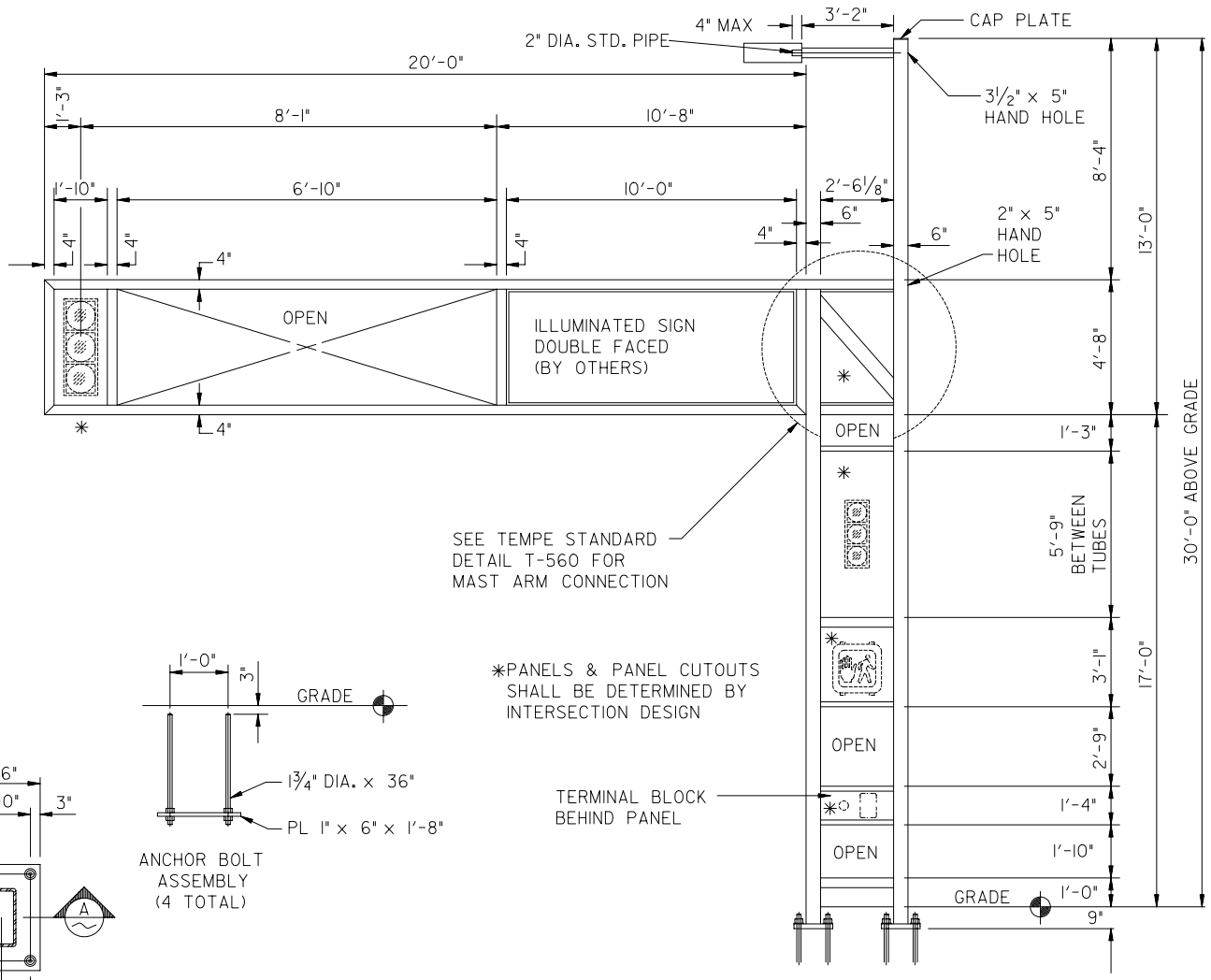

*PANELS & PANEL CUTOUTS SHALL BE DETERMINED BY INTERSECTION DESIGN

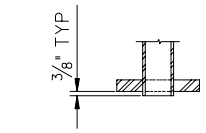

TYP. SECTION A

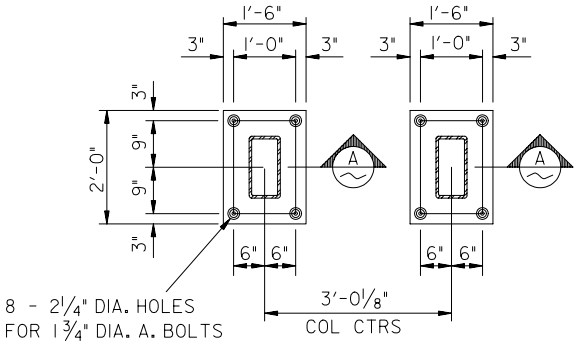

ANCHOR BOLT SETTING PLAN

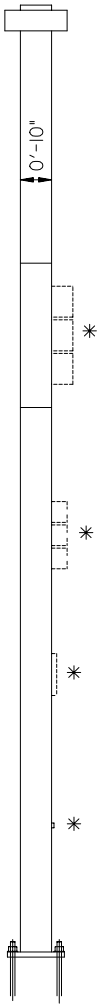

PROFILE

ORIGINAL SIGNATURE ON FILE AT THE CITY OF TEMPE

APPROVED: _____ _____
DEPUTY PUBLIC WORKS MANAGER TRANSPORTATION — DATE

APPROVED: _____ _____
DEPUTY PUBLIC WORKS MANAGER CITY ENGINEER — DATE

CITY OF TEMPE PUBLIC WORKS DEPARTMENT	MODULAR POLE 'F' - 20' MAST ARM	ASSEMBLY DRAWING ONLY SPECS AND DESIGN BY T.A. CAID INDUSTRIES, INC TUCSON, AZ	DETAIL T-556 REVISED 2001