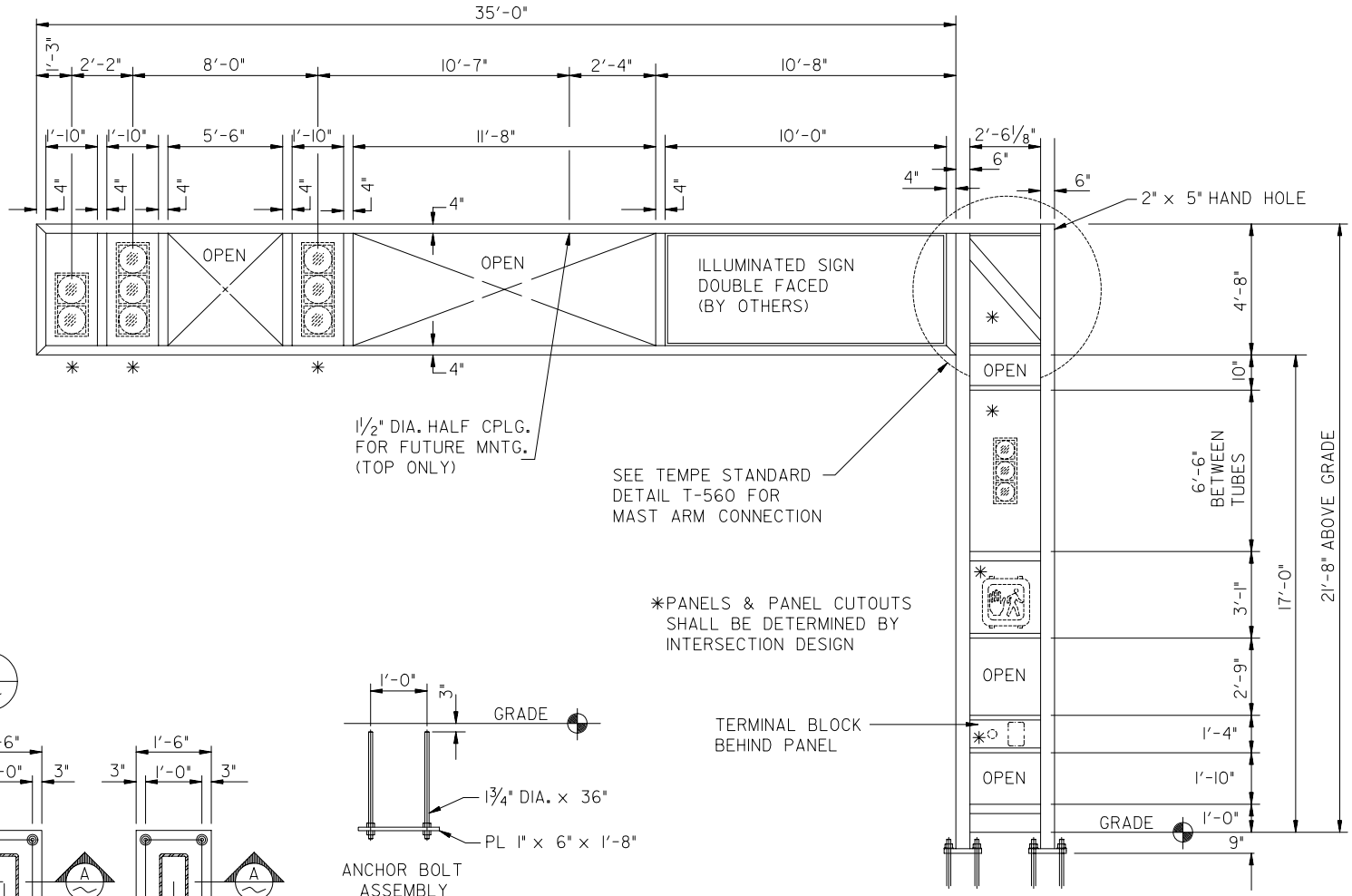

ORIGINAL SIGNATURE ON FILE
AT THE CITY OF TEMPE

APPROVED: _____ _____
DEPUTY PUBLIC WORKS MANAGER
TRANSPORTATION
DATE

APPROVED: _____ _____
DEPUTY PUBLIC WORKS MANAGER
CITY ENGINEER
DATE

CITY OF TEMPE PUBLIC WORKS DEPARTMENT	MODULAR POLE 'J' - 35' MAST ARM	ASSEMBLY DRAWING ONLY SPECS AND DESIGN BY T.A. CAID INDUSTRIES, INC TUCSON, AZ	DETAIL T-555 REVISED 2001