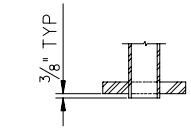

TYP. SECTION A

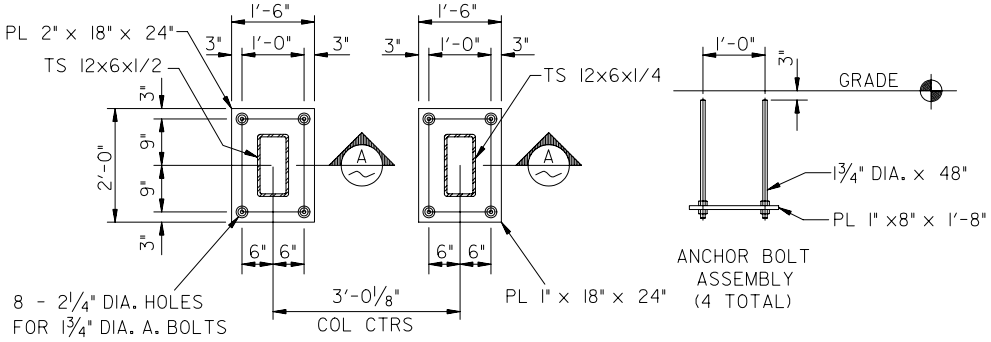

ANCHOR BOLT SETTING PLAN

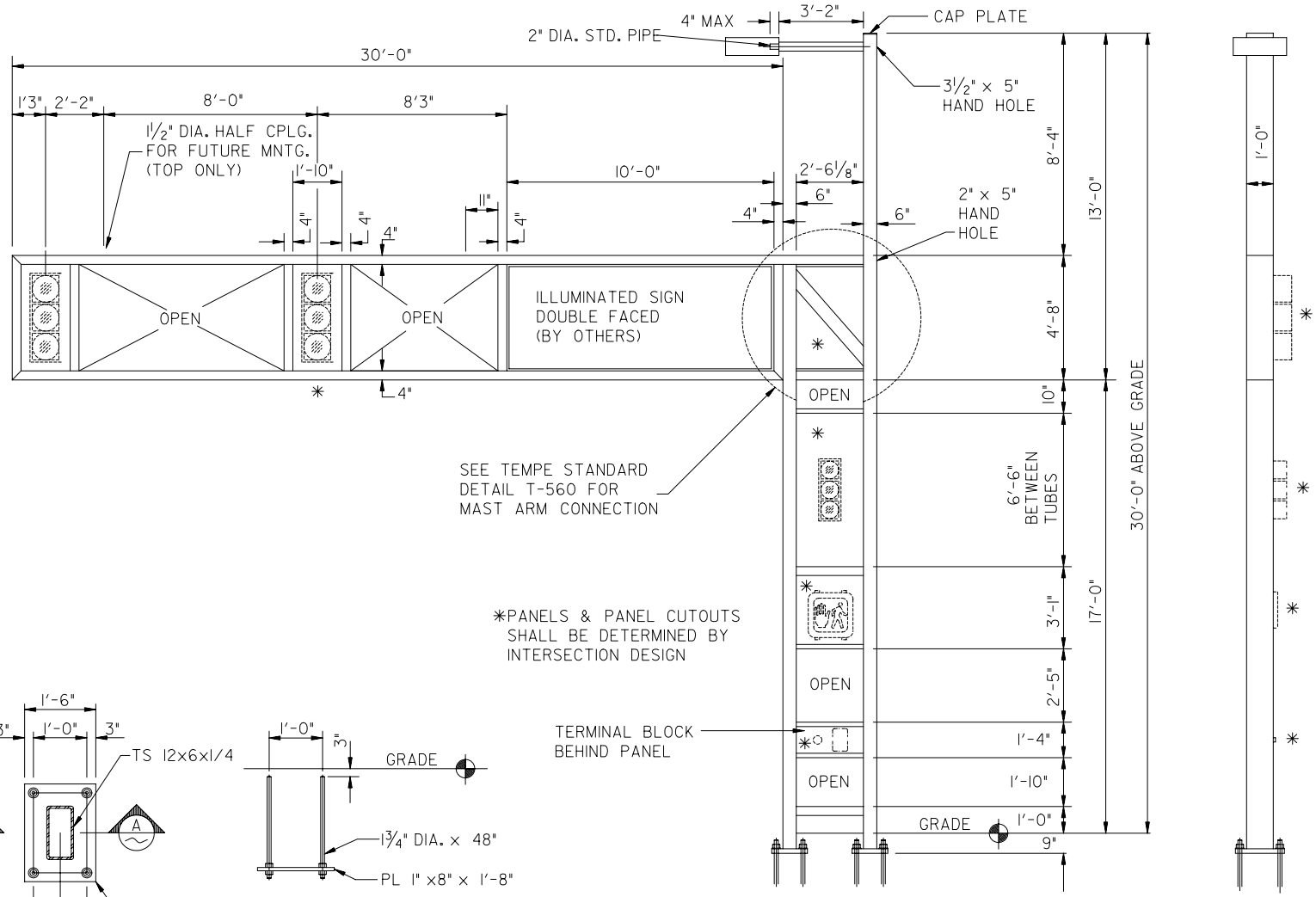

PROFILE

APPROVED: _____ _____
PUBLIC WORKS MANAGER DATE

APPROVED: _____ _____
DEPUTY PUBLIC WORKS MANAGER
CITY ENGINEER DATE

CITY OF TEMPE PUBLIC WORKS DEPARTMENT	MODULAR POLE 'Q' - 30' MAST ARM	ASSEMBLY DRAWING ONLY SPECS AND DESIGN BY T.A. CAID INDUSTRIES, INC TUCSON, AZ	DETAIL T-544 DRAWN 2005