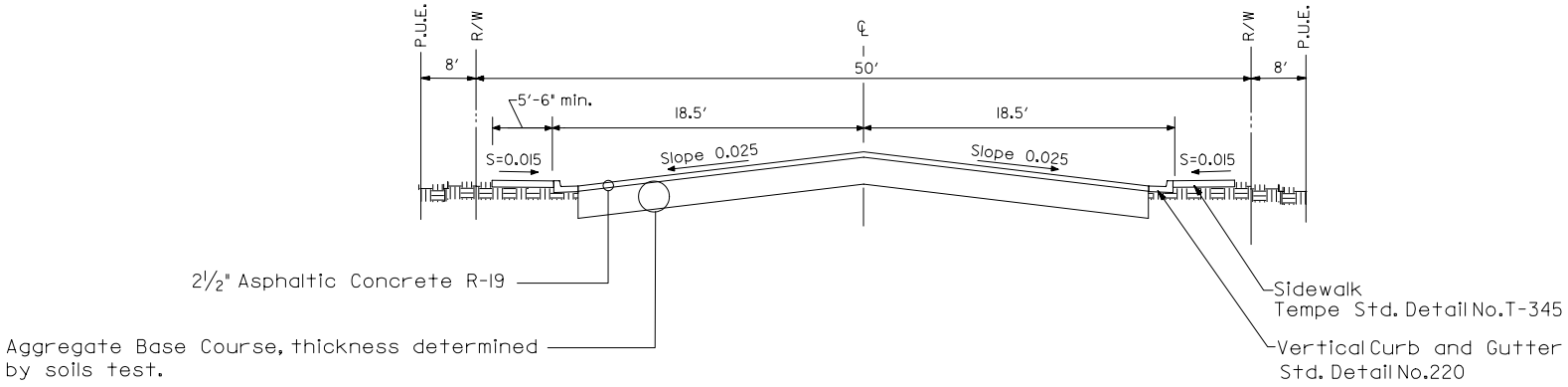

L-1 LOCAL STREET

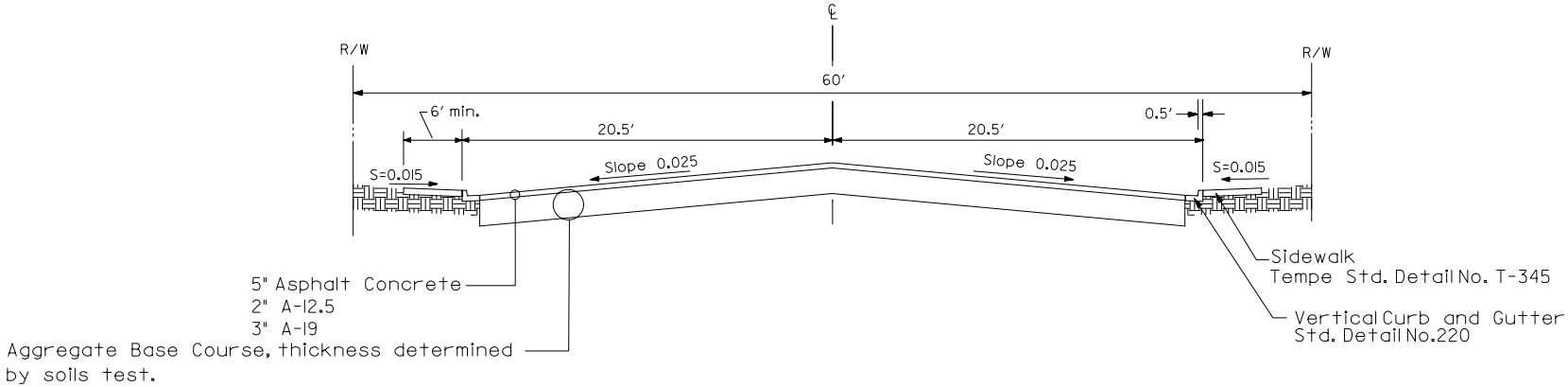

L-2 MULTI-FAMILY STREET STREET

APPROVED: _____ _____
DEPUTY PUBLIC WORKS MANAGER
CITY ENGINEER
DATE

CITY OF TEMPE PUBLIC WORKS DEPARTMENT	STREET CROSS-SECTIONS. (L-1,L-2)	DETAIL T-311 REVISED 2007