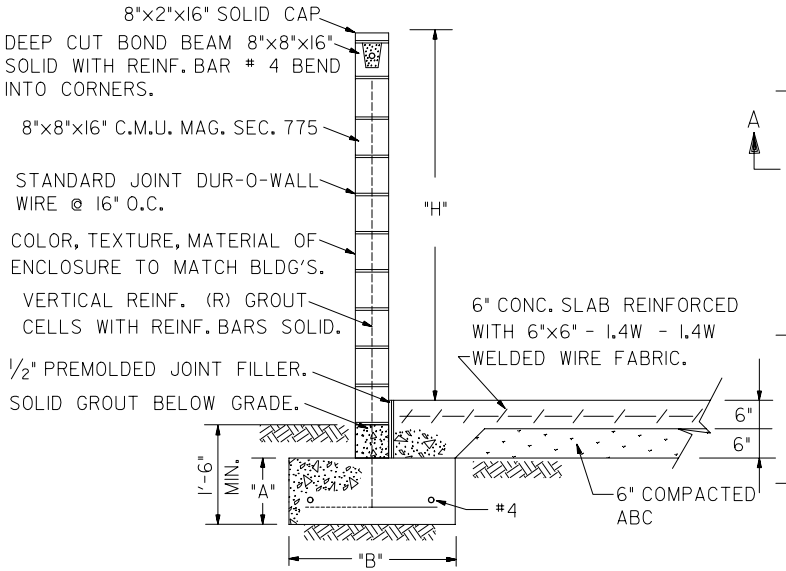

SECTION A-A

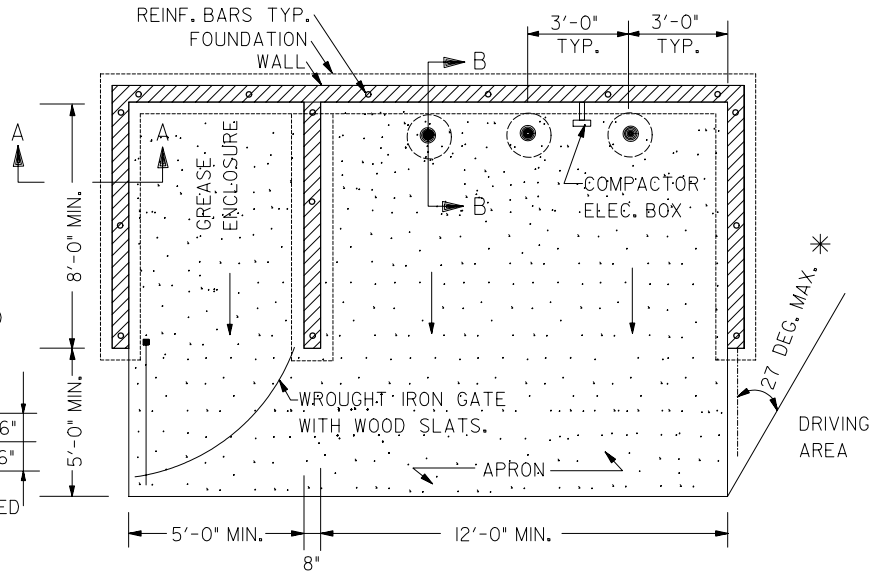

SMALL COMPACTOR ENCLOSURE.

PROPER CLEANING METHODS ARE TO BE USED TO PREVENT THE DISCHARGE OF WASH WATER INTO PUBLIC STORM DRAIN SYSTEM. PLEASE CONTACT THE CITY OF TEMPE ENVIRONMENTAL DIVISION AT 480-350-2678 FOR A LIST OF BEST MANAGEMENT PRACTICES THAT WILL HELP YOUR FACILITY COMPLY WITH ENVIRONMENTAL REGULATIONS.

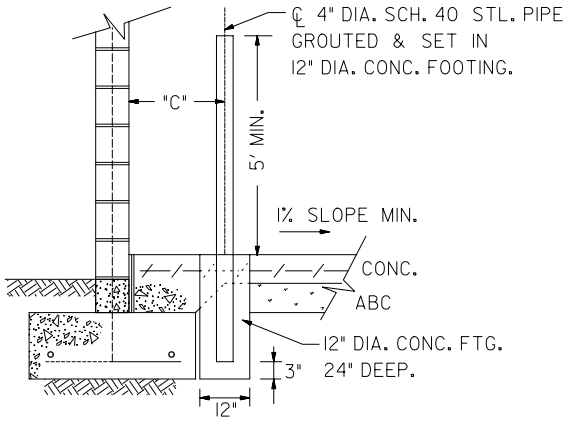

SECTION B-B

NOTES:

-CONSTRUCT ENCLOSURE PER M.A.G. SECTION 510.

-4" DIA. SCH. 40 STL. PIPE GUARD POSTS SHALL RECEIVE A ZINC CHROMATE PRIME COAT AND 2 COATS FLAT MATTE PAINT TO MATCH ENCLOSURE.

-ALL INTERIOR PAD DIMENSIONS ARE MINIMUMS.

-WALL HEIGHT DETERMINED BY COMPACTOR HEIGHT (6'-0" MIN.)

✳ -FINAL LOCATION & ORIENTATION TO BE DETERMINED BY THE CITY.

-CONCRETE f'_c =3,000 psi

-REINFORCING f_y =60,000 psi

f_s =24,000 psi

-MASONRY f_m =1,500 psi

TABLE # 1

"H"	"A"	"B"	"R"	"C"
6'-0"	12"	24"	#4 @ 48"	14"
7'-0"	12"	24"	#5 @ 48"	14"
8'-0"	12"	24"	#5 @ 48"	14"
9'-0"	12"	28"	#6 @ 48"	16"
10'-0"	12"	30"	#6 @ 48	17"

CITY OF TEMPE
DEVELOPMENT SERVICES DEPARTMENT

SMALL COMPACTOR REFUSE AREA

DETAIL DS-117
REVISED 2005

o:\microstation\ds117.dgn Mar. 24, 2005 15:07:23 City of Tempe - Do not reproduce