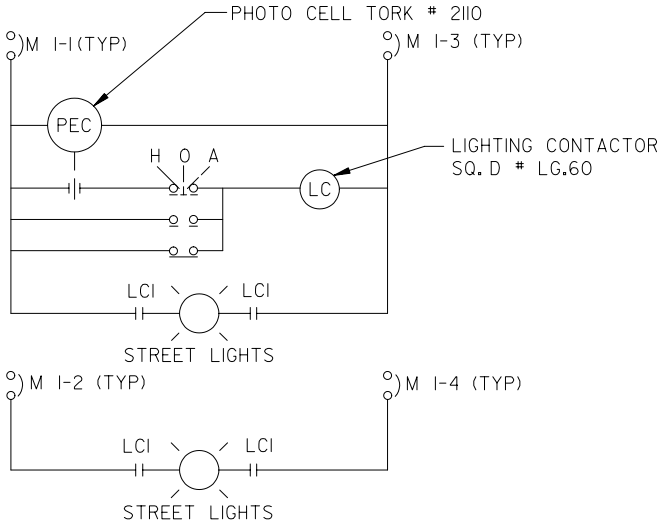

STREET LIGHTING SCHEMATIC

240 V. 10/

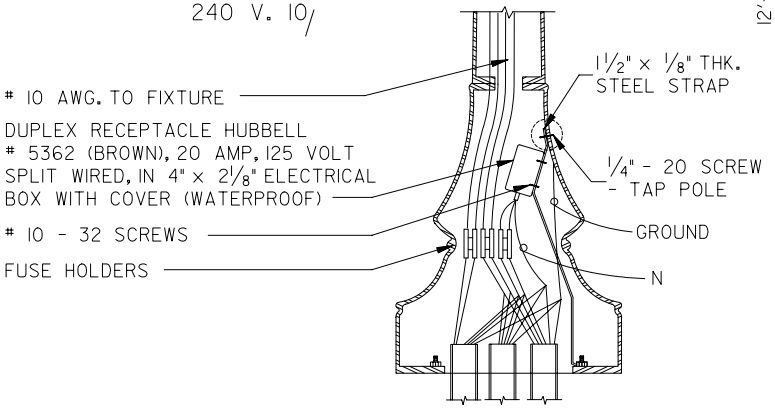

RECEPTACLE MOUNTING

(IF REQUIRED)

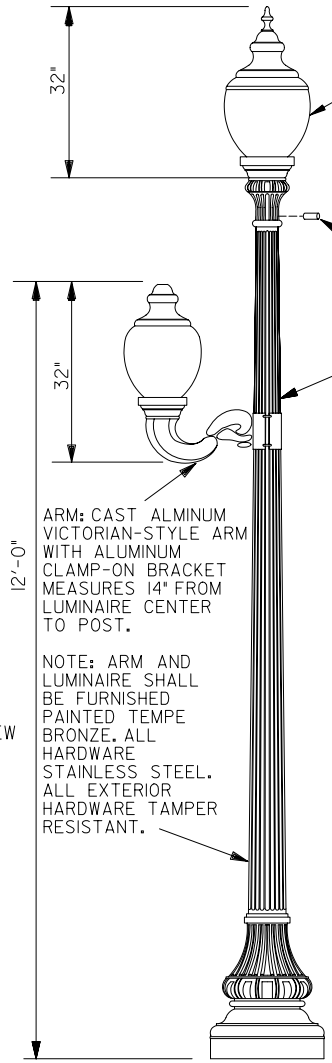

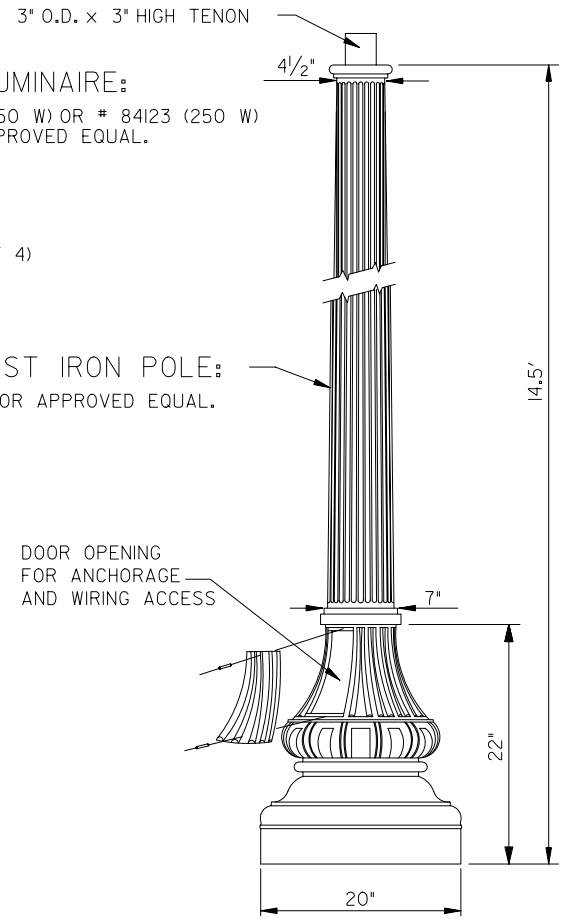

NOTE:

FOR PAINT SPECIFICATIONS SEE TEMPE STREET LIGHTING SPECIFICATION T-101.2.

INSTALL 2' BACK OF CURB TO FACE OF POLE UNLESS OTHERWISE NOTED ON PLANS.

ORIGINAL SIGNATURE ON FILE AT THE CITY OF TEMPE

APPROVED: _____ DEPUTY PUBLIC WORKS DIRECTOR _____ DATE

APPROVED: _____ CITY ENGINEER _____ DATE

CITY OF TEMPE PUBLIC WORKS DEPARTMENT	SPECIAL DISTRICT STREET LIGHT	DETAIL T-653 SHEET 1 OF 2 REVISED 1999