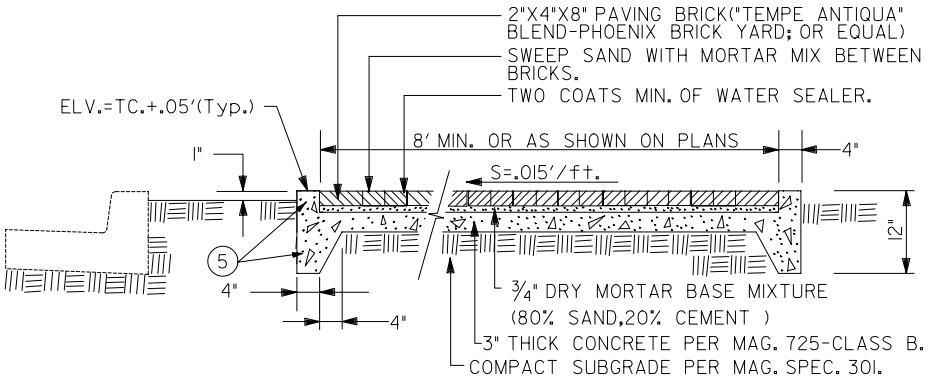

TYPICAL SECTION

NOTES

1. BROKEN CORNERS ON BRICK SIDEWALK PAVERS WILL BE ALLOWED - ONE (1) PER 50 SQ. FT.
2. PREMOLDED EXPANSION JOINTS OF THE TYPE DESIGNATED IN MAG SECT. 729 SHALL BE PLACED IN THE CONC. BASE AT 75' INTERVALS (FULL DEPTH INCLUDING BRICK).
3. LAY BRICK IN A RUNNING BOND PATTERN AS SHOWN.
4. THE TOP OF THE BASE SLAB SHALL BE BROOM FINISHED TO LEAVE A SLIGHTLY ROUGHENED SURFACE TO INSURE A GOOD BOND BETWEEN THE BASE AND BRICK COURSE.
5. THICKENED CONCRETE EDGE AND 4" CURB NOT REQ. AGAINST CURB OR BLD'G.
6. SINGLE HEADER COARSE NOT REQ. AGAINST BLDG.
7. BEGIN LAYING BRICK FROM FRONT OF WALK TO BACK, SAWCUT BRICK PIECES SHOULD BE LOCATED AT BACK OF WALK OR AGAINST BLDG.
8. BRICKS SHALL BE MECHANICALLY TAMPED UNTIL SURFACE OF BRICKS IS FLUSH.

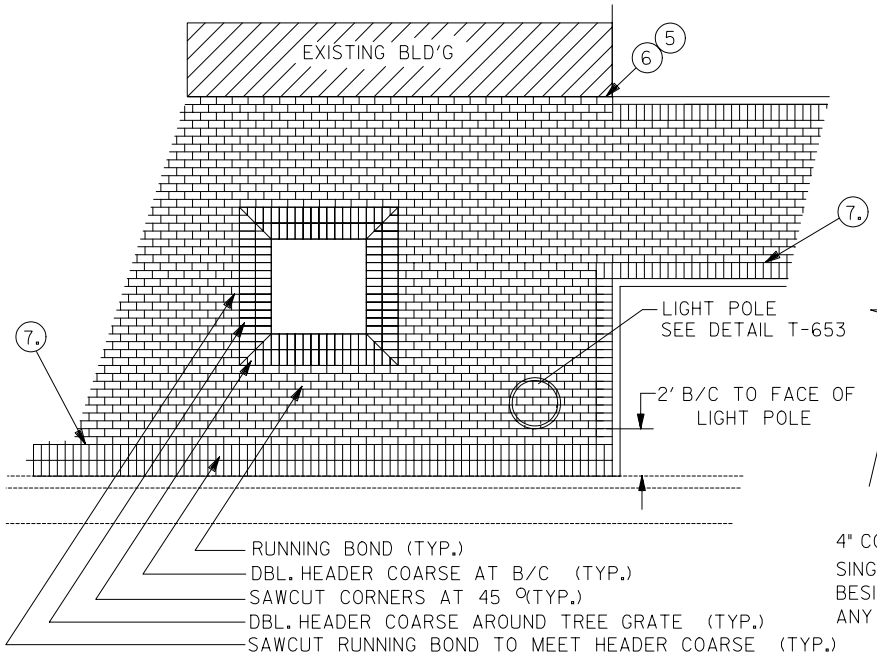

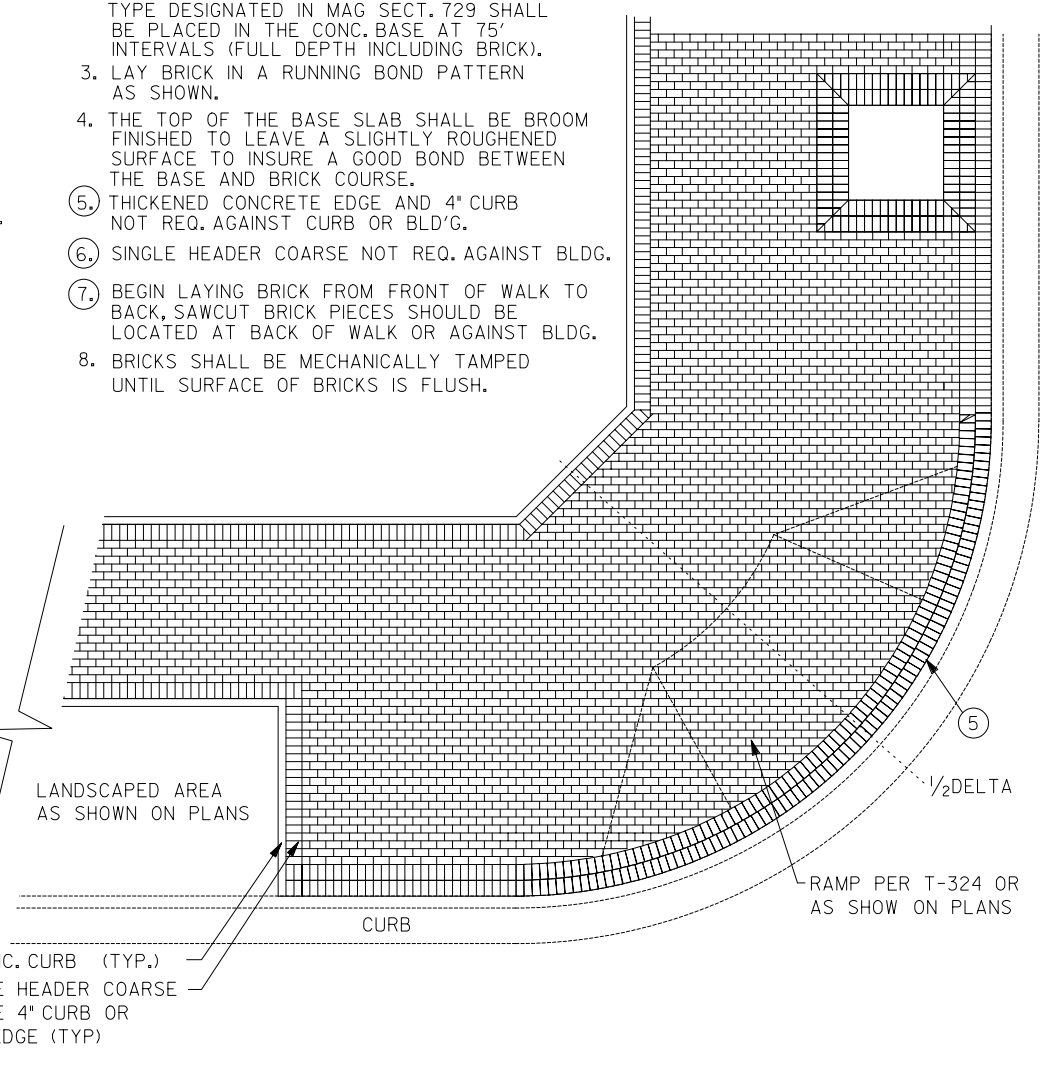

APPROVED: ORIGINAL SIGNATURE ON FILE AT THE CITY OF TEMPE

CITY ENGINEER DATE

CITY OF TEMPE PUBLIC WORKS DEPARTMENT	BRICK SIDEWALK AND TREE GRATE	DETAIL T-353 SHEET 1 OF 2 REVISED 2000