Tempe

Development Services Department
31 E 5th St.
Tempe, Arizona 85281

480-350-8341
480-350-8677 (fax)
www.tempe.gov/tdsi/

Residential Electrical Service

Replacement/Relocation Checklist

for Services of 200 amps or less

Revised 07/27/06

Tempe

Development Services Department
31 E 5th St.
Tempe, Arizona 85281

480-350-8341
480-350-8677 (fax)
www.tempe.gov/tdsi/

Electric Utility Supplier

SRP - 602-236-8888 APS – 602-371-7171

☐ Location approved

☐ Conductor height above roof surface

☐ Conductor height above pool

☐ Equipment approved

☐ Service disconnect order scheduled

(See the applicable utility specification sheets)

Permit, Inspection and Code Requirements

☐ Electrical permit obtained

☐ Inspection requested through IVR system

☐ Contact inspection section between 6:00 – 6:30 am the morning the inspection is scheduled for the inspector's ETA

☐ Equipment is listed for exterior (NEMA 3R) use

☐ Overhead conductors are the proper height above any roof surface
- Flat to < 4 in 12 slope – minimum 8 ft. above*
- 4 in 12 slope or greater – minimum 3 ft. above
- At overhang portion – minimum 18 in. above

☐ Overhead conductors are the proper height above pool
- See utility specifications - SRP sheet 5-5 or APS sheet 401.1

☐ Service conductors properly sized based on service disconnect amperage
- 200 amp = 3/0 cu conductors 175 amp = 2/0 cu conductors
- 150 amp = 1/0 cu conductors 125 amp = 1 cu conductors
- 100 amp = 2 cu conductors

☐ Service equipment securely mounted to structure

Tempe

Development Services Department
31 E 5th St.
Tempe, Arizona 85281

480-350-8341
480-350-8677 (fax)
www.tempe.gov/tdsi/

☐ ¼ inch air space provide between service equipment and structure finish materials

☐ Working clearance (30" W x 36" D) provided at service equipment
- See utility specifications - SRP sheet 2-5 or APS sheet 301.7

☐ Minimum headroom (6 ½ ft) provided

☐ Main disconnecting means identified
- Installed adjacent to and accessible from the same working space as the utility meter.

☐ Branch circuit disconnecting means identified on panel schedule

☐ Feeder and branch circuit connections completed

☐ Metal water piping systems bonded
- 200 amp = min #6 cu conductor
- 100 amp = min #8 cu conductor

☐ Gas piping system bonded
- 200 amp = min #6 cu conductor
- 100 amp = min #8 cu conductor
- 30 – 60 amp = min # 10 cu conductor
- 20 amp = min #12 cu conductor

☐ Grounding electrode conductor properly sized
- 2/0 or 3/0 = min #4 cu conductor
- 1 or 1/0 = min #6 cu conductor

☐ Connection to existing grounding electrode (ufer) system
- If not available, provide two 8 ft ground rods a minimum of 6 ft apart

Customer Note:

* Generally the electrical utility companies will not connect to a mast riser that is over 6 ft. tall unless prior written approval is given by the serving utility company and there is access for a bucket truck.

The "banjo style" meter is no longer allowed by the electric utility companies. When replacing a service panel with this type of meter assembly, the serving utility company will require the replacement of the meter assembly including the mast and conductors. The new conductors shall be sized per the International Residential Code Table E3503.1 as amended in the >30° column or the National Electrical Code Tables 310-16 to 310-19 Note 3 as amended in the >30° column.

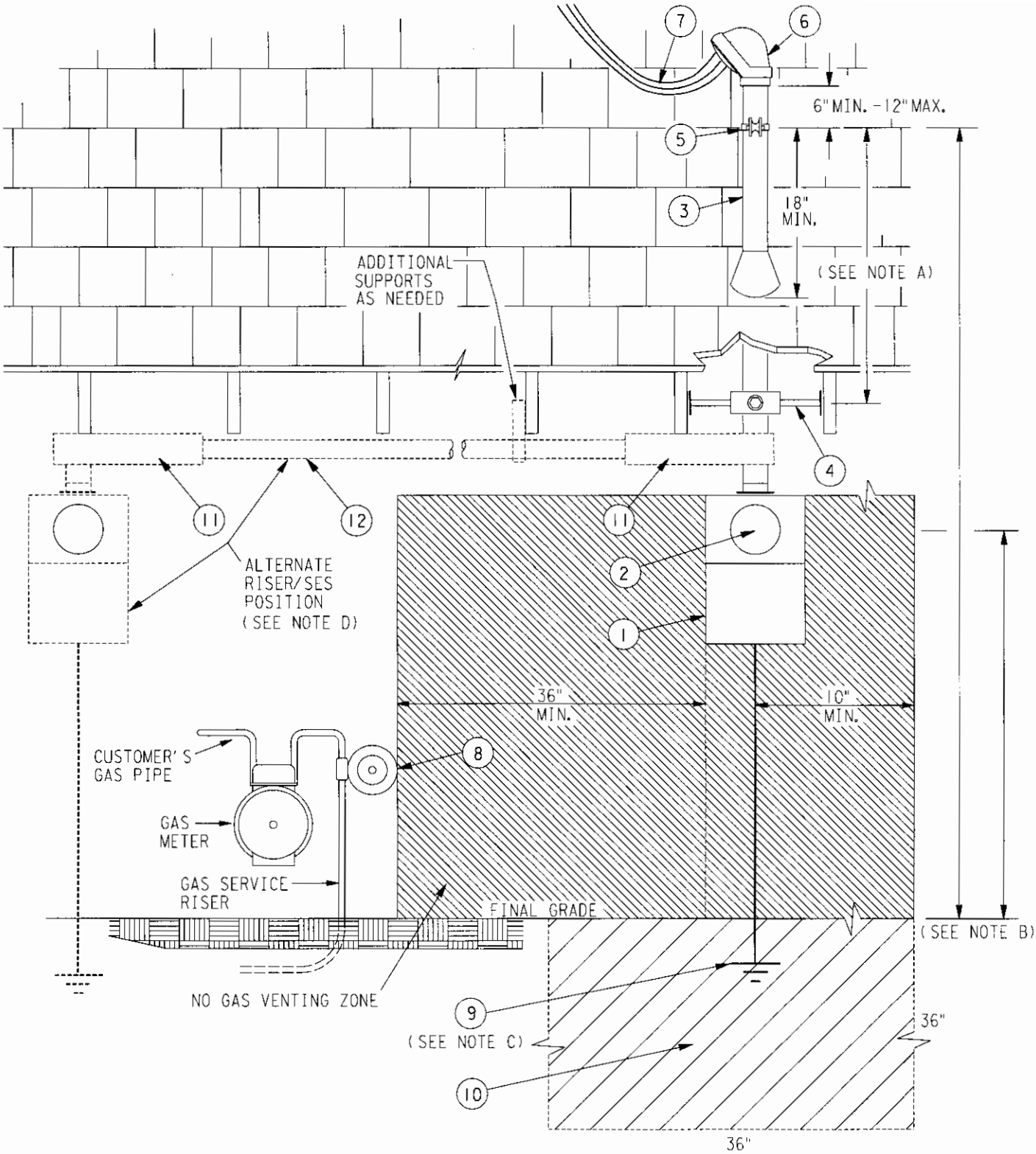

8509E15.DGN		ELECTRIC SERVICE SPECIFICATIONS
DATE: 04/15/89 REV. NO: 9 REV. DATE: 11/17/04 APPROVAL: MLD	SERVICE ENTRANCE SECTION-OVERHEAD OVERHEAD INSTALLATION	SRP®
2-5		PROPRIETARY MATERIAL

3. OVERHEAD SERVICE ENTRANCE INSTALLATION

Call 48 hours in advance for inspection:

(602) 236-0676 West Valley, (602) 236-6300 East Valley.

Legend

1 All in one meter panel assembly

2 Meter (installed by customer's meter provider)

3 Steel riser

4 Manufactured riser brace (always required), eave support to be rigid conduit. Sheetrock screws, nails or similar fastening devices are not permitted. Full-thread #6 screws, 1" long or longer are acceptable.

5 Clamp, point of attachment

6 Weatherhead

7 Customer wire, minimum 18 inches

8 Gas Company regulator or vent – no venting allowed in shaded area

9 Service Entrance grounding

10 Permanent, level, clear working area – hashed area

11 Sealable gutter or rigid or intermediate elbows

12 Rigid or Intermediate metallic conduit

NOTES

A. Additional riser bracing is required if the distance from the point of the last brace to the last riser brace is greater than 26 inches for 1-1/2 inch pipe or 36 inches for 2-inch pipe. See page 2-7 & 2-8 for bracing requirements.

B. See page 5-3 through 5-5 and 5-18 for height requirements.

C. See page 8-1 & 8-2 for bonding and grounding requirements.

D. Alternate Riser Position requires prior approval from Distribution Design. The "no gas venting zone" around this location applies.

DUAL RISER

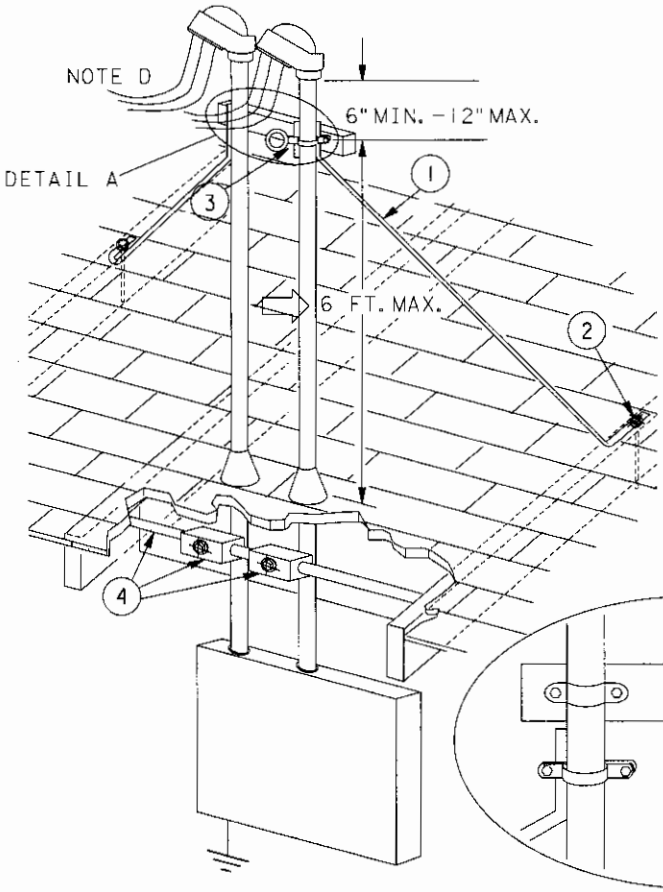

SINGLE RISER

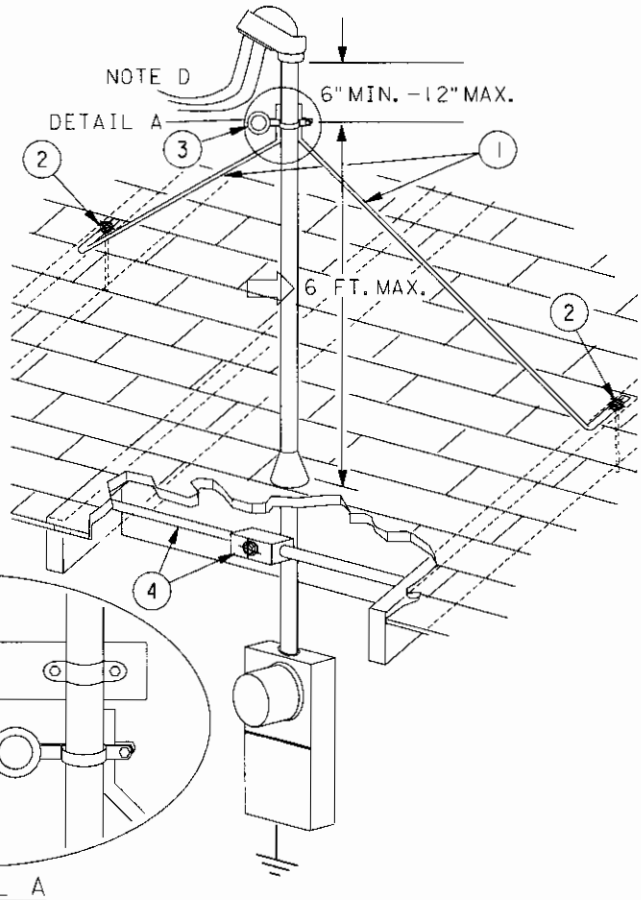

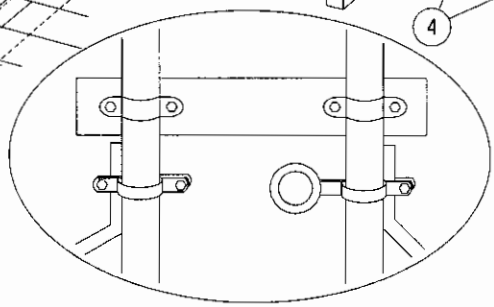

DETAIL A

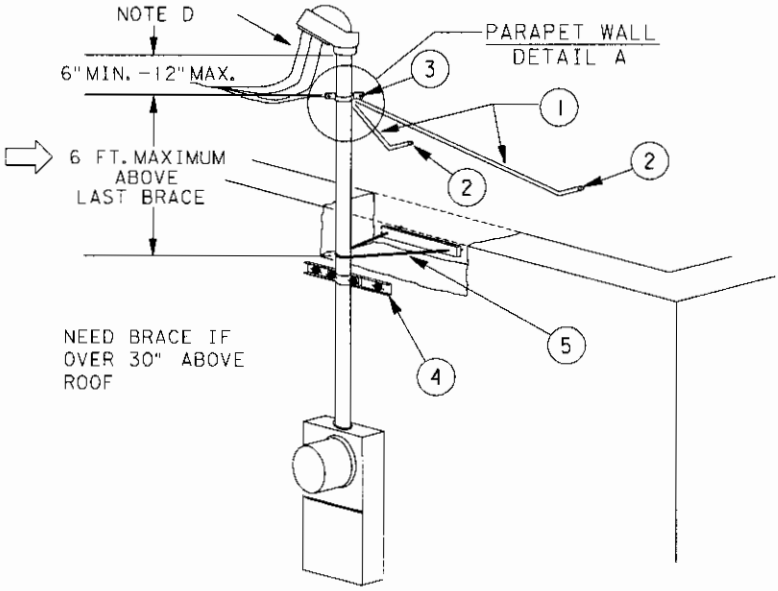

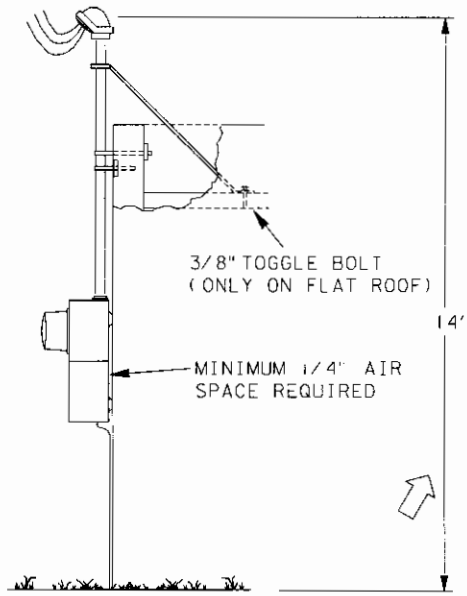

SIDE VIEW

8509E15.DGN		ELECTRIC SERVICE SPECIFICATIONS
DATE: 04/15/89 REV. NO: 9 REV. DATE: 03/24/05 APPROVAL: MLD	SERVICE ENTRANCE SECTION-OVERHEAD OVERHEAD INSTALLATION SINGLE AND DUAL RISER	SKP® PROPRIETARY MATERIAL
2-7		

4. OVERHEAD SERVICE ENTRANCE – ADDITIONAL RISER BRACING

Call 48 hours in advance for inspection:

(602) 236-0676 West Valley, (602) 236-6300 East Valley.

Legend

1 Mast braces

2 Mast brace bolts through rafters

3 Point of attachment clamp

4 Manufactured riser brace (always required), eave support to be rigid conduit (see note E for parapet wall installation). Sheetrock screws, nails or similar fastening devices are not permitted. Full-thread #6 screws, 1" long or longer, are acceptable.

5 Conduit jack brace (see note E for parapet wall installation)

NOTES

A. 8 foot service masts are acceptable if approved by the Designer in writing and if there is access for a bucket truck.

B. Additional bracing consists of two galvanized steel members installed at approximately a 90° spread and opposite the load from the service drop. Minimum brace size shall be 3/4" rigid galvanized steel pipe or 1-1/4" x 1-1/4" x 1/8" galvanized steel angle. EXCEPTION (residential only): braces may be 3/4" electrical metallic tubing (EMT).

C. Mast braces shall be solidly fastened to the roof support structure (beams or rafters) using 3/8 inch minimum galvanized bolts, nuts, flat washers and lock washers and shall be bolted to the Point of Attachment. **Lag screws, nails or similar fastening devices are NOT permitted.**

   1) Commercially manufactured anchor plates may be used instead, provided they are capable of withstanding the forces described on page 2-3 and are installed per manufacturer's instructions.

   2) Permanent sealing of the roof penetration shall not be done until SRP has completed the new service connection. The person installing the service mast braces is responsible for determining the load-bearing capability of the roof and for sealing any roof penetrations. Any SRP inspection is solely for the purpose of insuring the structural integrity of the service mast bracing.

D. When the service mast is 6 to 8 feet above the roof, the Customer's wire shall extend a minimum of 30 inches from the weatherhead.

E. Parapet wall installation only: Service mast anchor or conduit jack braces are ALWAYS required. SRP Inspector must approve alternate anchor method when installation on parapet walls does not allow this bracing.

F. See page 5-3 through 5-5 for clearance requirements.

All below roof requirements are shown on page 2-5 & 2-6.

SWIMMING POOL CLEARANCES FROM UTILITY OWNED, OPERATED AND MAINTAINED SUPPLY LINES AND SERVICE DROPS

(RULE 234E, N.E.S.C.)

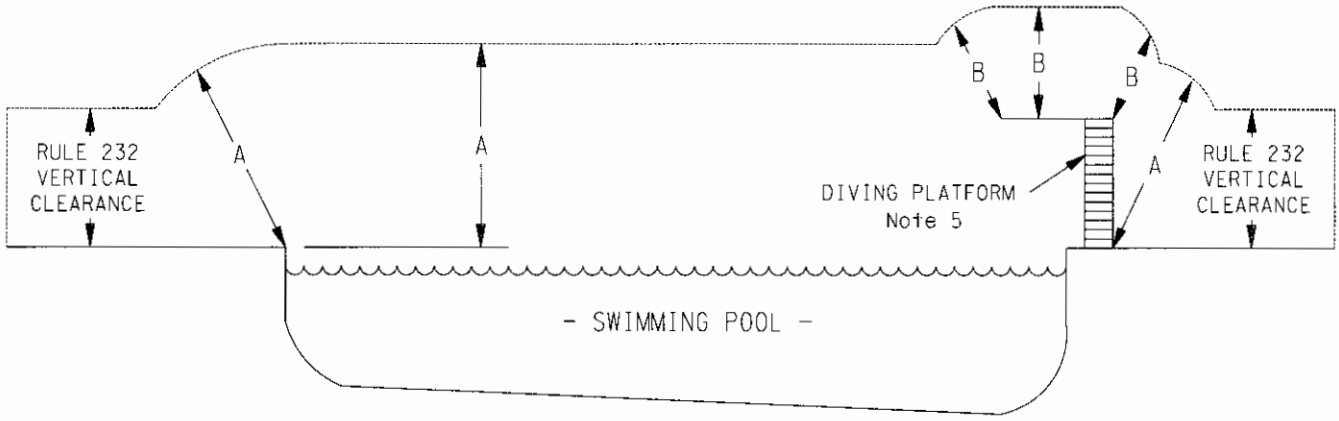

CLEARANCE DIMENSIONS (IN FEET)

	GROUNDED GUYS & NEUTRALS 0-22kV	MPX CABLE 0-750V	OPEN WIRE 0-750V	OPEN WIRE 750V-22kV	69kV
DIMENSION "A"	22 (Note 2)	22.5 (Note 2)	23	25	26
DIMENSION "B"	14 (Note 2)	14.5 (Note 2)	15	17	18

NOTES

1. ALL VOLTAGES ARE PHASE TO GROUND WITH CONDUCTOR @120°F FINAL SAG, EXCEPT 69kV, WHICH IS PHASE TO PHASE WITH CONDUCTOR @167° FINAL SAG.
2. DOES NOT APPLY WHEN CONDUCTORS ARE MORE THAN TEN FEET HORIZONTALLY FROM EDGE OF POOL OR DIVING PLATFORM.
3. MINIMUM CLEARANCES MUST BE MAINTAINED FROM NEIGHBORING SERVICES.
4. AVOID CROSSING OVER POOLS WHENEVER POSSIBLE.
5. TO DETERMINE THE MINIMUM CLEARANCE OVER A DIVING PLATFORM, USE THE LARGER OF:
   (a) DIMENSION "A" FROM TABLE
   (b) DIMENSION "B" PLUS THE DIVING PLATFORM HEIGHT
6. TO CALCULATE THE VERTICAL CLEARANCE WITH A GIVEN "A" OR "B" DIMENSION AND A HORIZONTAL DISTANCE FROM AN EDGE:

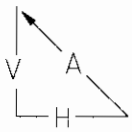

$V = \text{Square Root of } A^2 - H^2$

7. CONTACT LOCAL MUNICIPALITY FOR ADDITIONAL CLEARANCE REQUIREMENTS WHICH MAY PREVAIL.

8509E82.DGN		ELECTRIC SERVICE SPECIFICATIONS
DATE: 04/15/86 REV. NO: 6 REV. DATE: 05/09/03 APPROVAL: MLD	CLEARANCES SWIMMING POOL OVERHEAD LINE CLEARANCES	SKP®
5-5		PROPRIETARY MATERIAL

1. The following are SRP specifications; Customer should contact their meter servive provider for additional requirements.
2. All heights are measured from the standing surface to the centerline of the meter.
3. When meters are mounted outdoors, the minimum height of the center of the meter shall not be less than four feet (4') and the maximum height shall not exceed six feet three inches (6' 3") from final grade. The desired height is five feet (5') from final grade.
4. WORKING SPACE (SRP REQUIREMENTS).
   A. To permit access to SES installations and to provide safety for personnel, an unobstructed working and standing space entirely on the property of the Customer is to be provided in front of all SES equipment. Vehicle parking is not allowed in this area. All clearances must be at least as shown below.
   B. Dimension will be minimum 42" for 320 amp to 800 amp service and 12" for 225 amp (or less) service The total height for working clearances shall be no less than six feet six inches (6' 6").

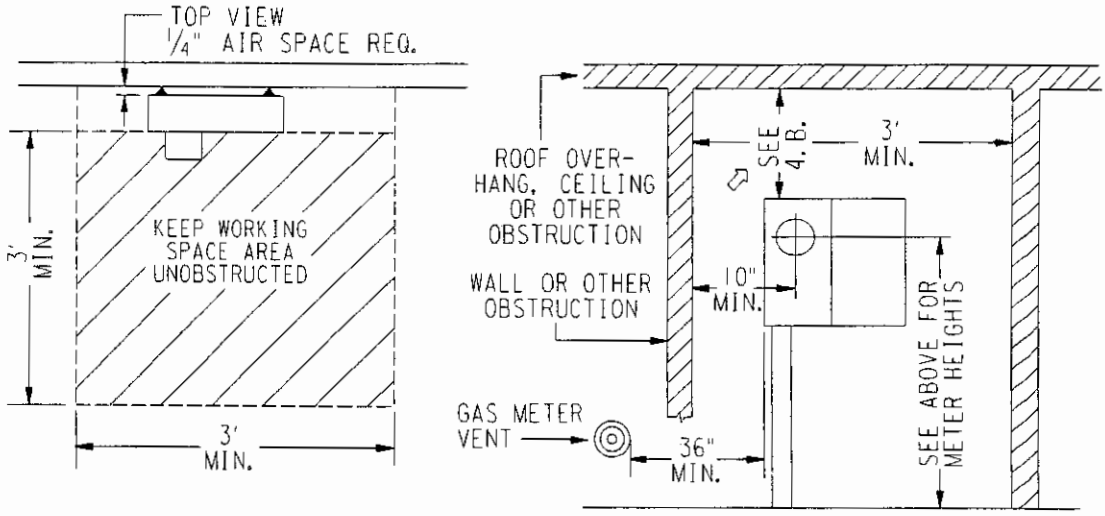

5. BARRICADES

The Customer will furnish, install and maintain or make a contribution in aid of construction to SRP (at SRP's option) for permanent barricades to provide protection where the working space is exposed to vehicles or hazardous conditions. The determination of need, type, size and location of barricades is at the sole discretion of SRP (also see page 5-13).

ELECTRIC SERVICE SPECIFICATIONS SRP® PROPRIETARY MATERIAL		8509E118.DGN
	CLEARANCES SERVICE ENTRANCE SECTION LOCATIONS HEIGHTS & WORKING SPACE CLEARANCE	DATE: 04/15/86 REV. NO: 7 REV. DATE: 01/28/05 APPROVAL: MLD
		5-18

301.7 **WORKING SPACE** (600 volts or less)

To permit access to the metering installations and provide safety for personnel, a working and standing space entirely on the property of the Customer shall be provided in front of all metering equipment.

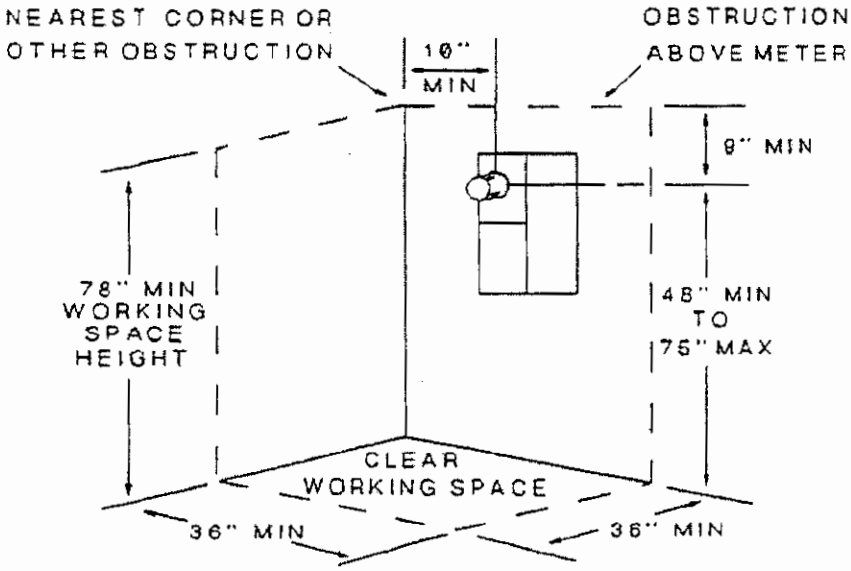

FIGURE 1
SURFACE OR SEMI-FLUSH
METER INSTALLATIONS

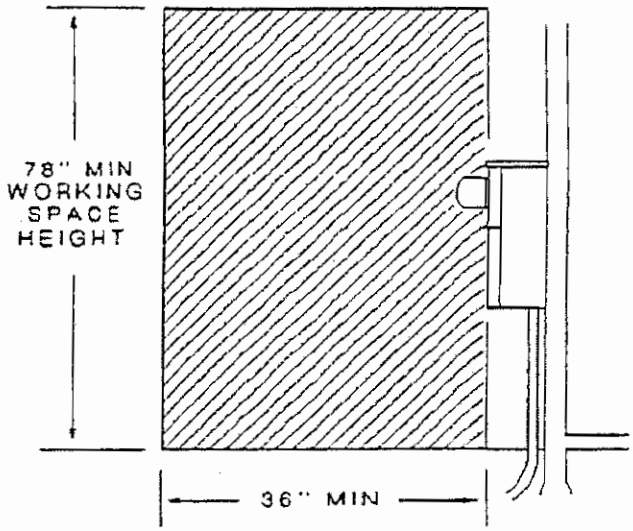

FIGURE 2
WORKING SPACE SIDE-VIEW

301.16 FIGURE 1 - ELECTRIC AND GAS METER SEPARATION

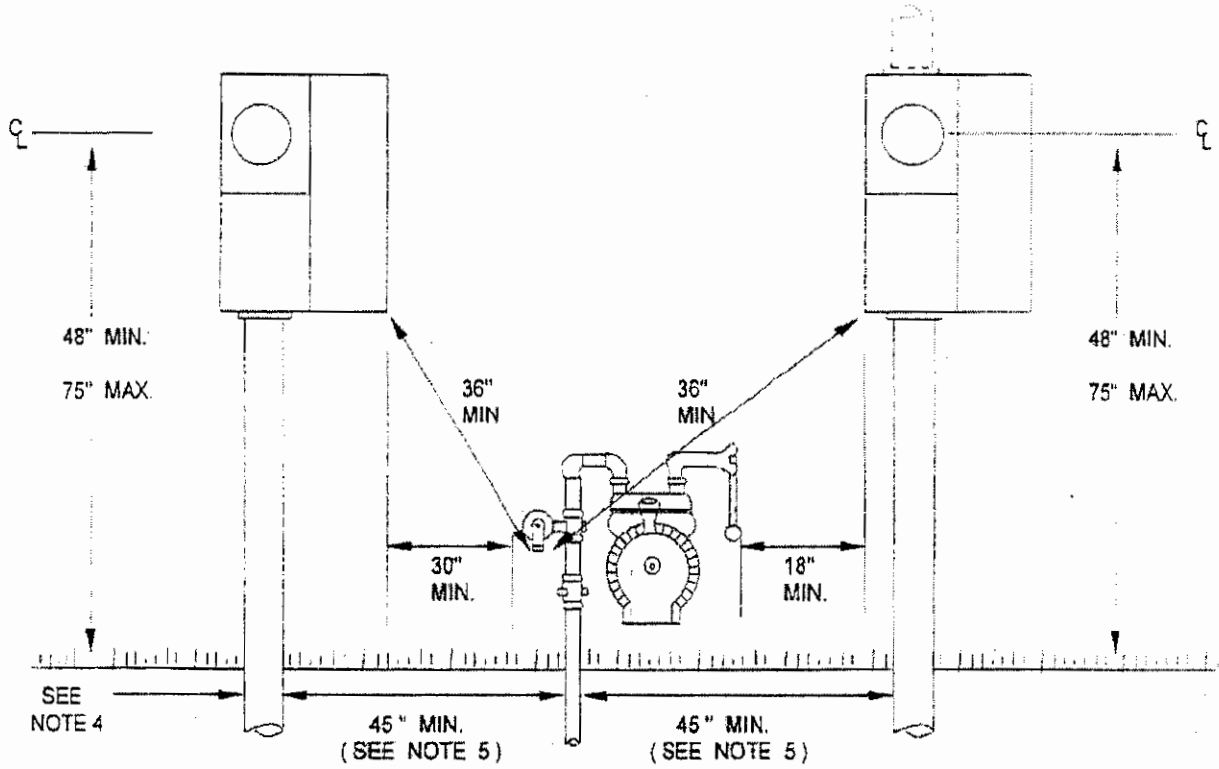

301.16 ELECTRIC AND GAS METER SEPARATION

1. Size and dimensions of panels will vary.

2. Working clearance shall be a minimum of 36 inches wide. If electric panels extend wider than the 36 inch minimum, working clearance shall be the width of the entire assembly. Working space shall extend out from face of electric meter panel a minimum of 36 inches.

3. Measure minimum horizontal separation from edge of electric meter can to the closest point of the gas service, or from electrical riser "stub-up" to gas riser "stub-up". All minimum dimensions on above drawing must be met.

4. For conduit system and riser requirements, refer to Section 500.

5. For trenching requirements, refer to Section 600.

6. Gas piping (above grade) can be located below electric meter panel(s), but no couplings in that area.

7. APS prefers water piping and/or hose bib out from under meter panel to make sure working space is safe and dry

401.1 MINIMUM VERTICAL CLEARANCES (SWIM POOLS)

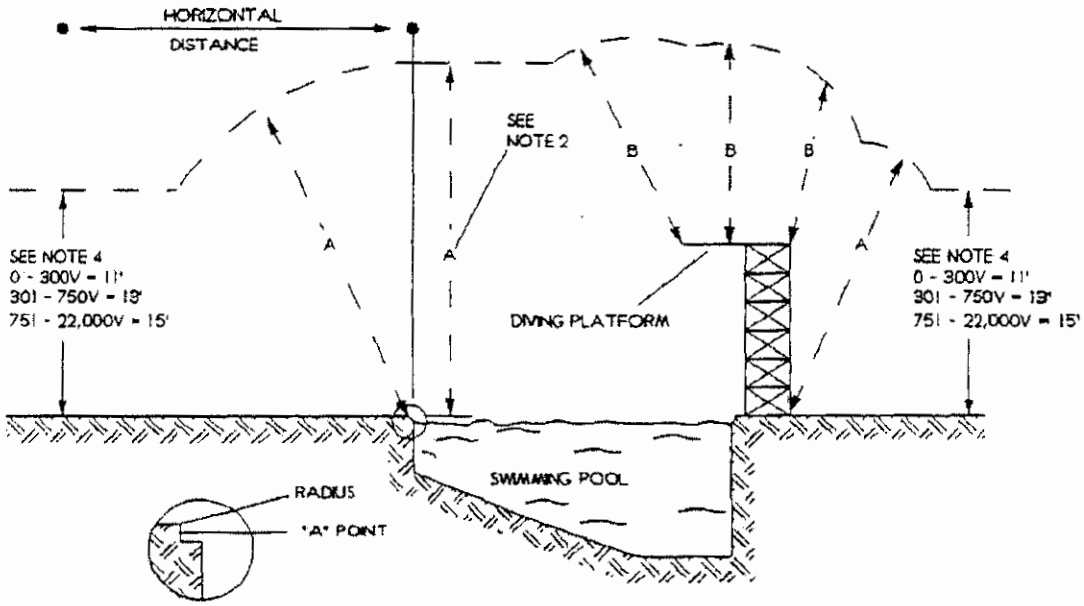

DIMENSION A:

VOLTAGE	HORIZONTAL DISTANCE EDGE OF POOL OR DIVING PLATFORM BASE										
	OVER POOL	1'0"	2'0"	3'0"	4'0"	5'0"	6'0"	7'0"	8'0"	9'0"	10'0"
VERTICAL CLEARANCE OF INSULATED SUPPLY CABLES WITH GROUNDED MESSENGER 0 TO 750 V (MULTIPLEX)	23'0"	23'0"	22'11"	22'10"	22'8"	22'6"	22'3"	22'0"	21'8"	21'4"	20'11"
VERTICAL CLEARANCE OF OPEN SUPPLY LINE CONDUCTOR 0 TO 22 KV	25'0"	25'0"	24'11"	24'10"	24'8"	24'6"	24'3"	24'0"	23'8"	23'4"	22'11"

DIMENSION B:

MULTIPLEX CABLE 0 - 750 VOLT = 15'0"	OPEN WIRE 0 - 22 KV = 17'0"

NOTES:

1. All voltages are phase-to-ground.
2. When Dimension "A" is greater than the sum of Dimension "B" plus the diving platform height, use Dimension "A".
3. Minimum clearances must be maintained from neighboring services.
4. Clearances indicated are for areas accessible to pedestrians only, when service wires are located more than 10 feet horizontally away from pool's edge.
5. The swimming pool clearances shown above apply to all types of swimming areas including above and below ground pools, and spas.
6. These dimensions shall also comply with local municipal requirements.

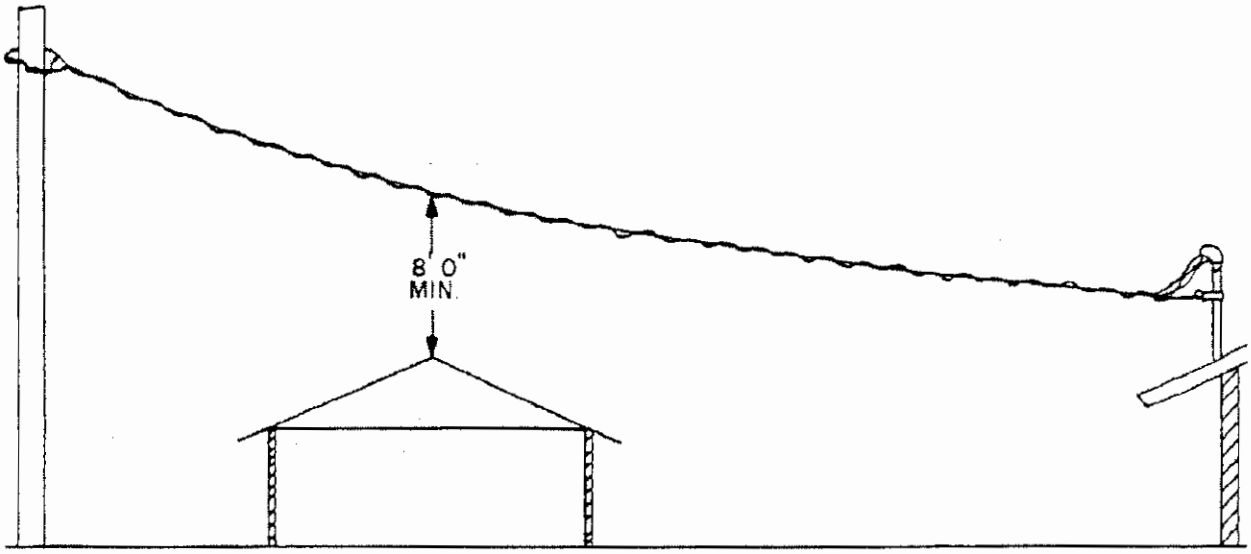

Figure 1

Clearance above residential, non-residential or industrial buildings on premises served or adjacent premises; OTHER THAN THE BUILDING SERVED. See Paragraph 401.3 for possible exceptions.

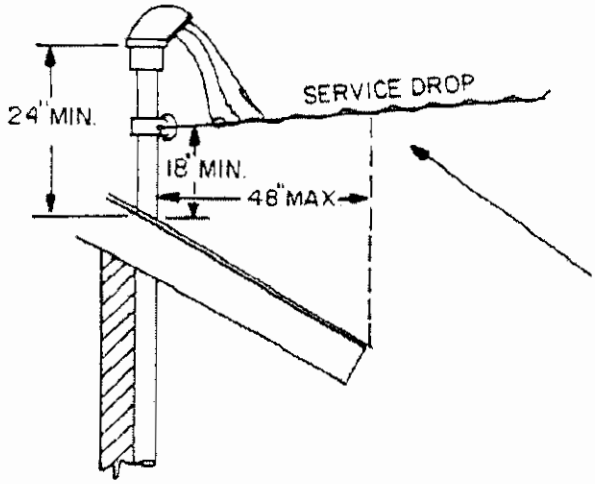

See Paragraph 401.0 for minimum point of attachment of service drop.

Maximum of 4 feet of service drop conductors passing over the overhang portion of the roof.

Figure 2

Service entrances shall not be located within a roofed-over area necessitating APS personnel to walk on or place a ladder on roof to make attachment to riser conduit or support and to connect Customer's service.

401.4 POINT OF ATTACHMENT STRUCTURE

An attachment structure is a support for the purpose of providing a higher point of attachment for the service drop than is provided by the building itself. It may be constructed of rigid galvanized steel pipe or galvanized angle iron. When an attachment structure is necessary to maintain the required clearances, it shall be of a type satisfactory to APS and meet all applicable codes. Such a structure shall be installed and maintained at the expense of the property owner or customer and be of sufficient strength to support the service drop wires and service attachment. The service entrance conduit may be used as and considered to be, an attachment structure; in which case the riser shall be not less than 1 1/2" galvanized rigid steel conduit. (See Paragraph 400.1) EMT or Plastic shall not be used.

401.4-1 ATTACHMENT STRUCTURE

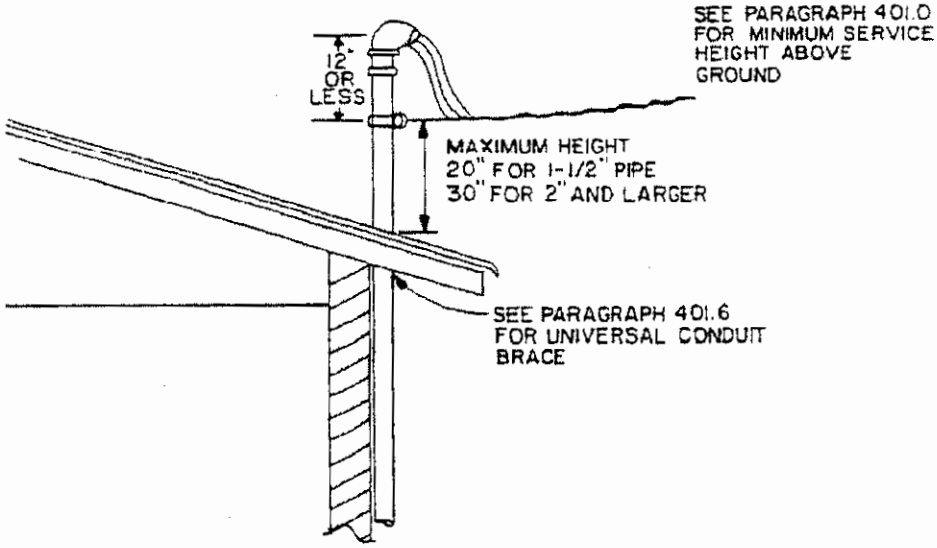

Figure 1

Where the service conduit riser is used as a mast for supporting the service drop, the point of attachment shall not be higher than 30" above the roof (20" for 1 1/2" rigid conduit) unless substantially braced (not guyed) to provide sufficient strength to support the strain of the service conductors, and to permit a man to work safely from a ladder bearing against the conduit. (See Paragraph 401.5 for alternative to bracing for residential.)

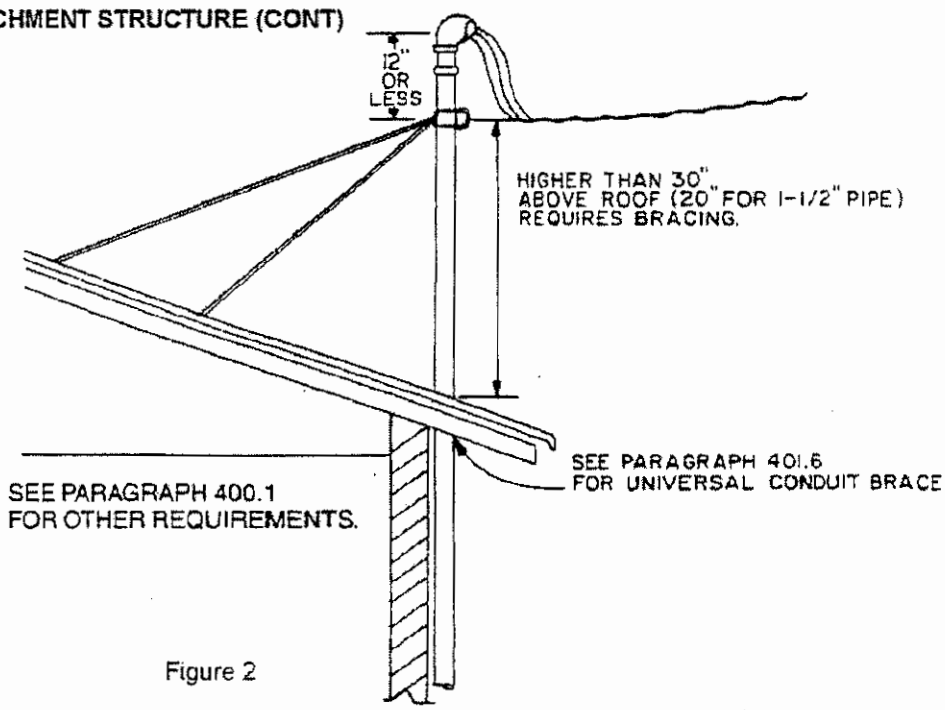

Figure 2

Risers that are required to be braced shall be braced against the pull of the service drop conductors. Bracing shall consist of two steel members installed at approximately a 90 degree spread. Minimum size braces shall be 3/4" rigid galvanized steel pipe or 1 1/4" x 1 1/4" x 1/8" steel angle.

EXCEPTION: Residential and non-residential, 200 ampere service or less: 3/4" electrical metallic tubing (EMT) may be used for braces if used to pull against the load as shown in Figure 2 and 4, Paragraph 401.4-1. Push braces must be rigid steel as listed above.

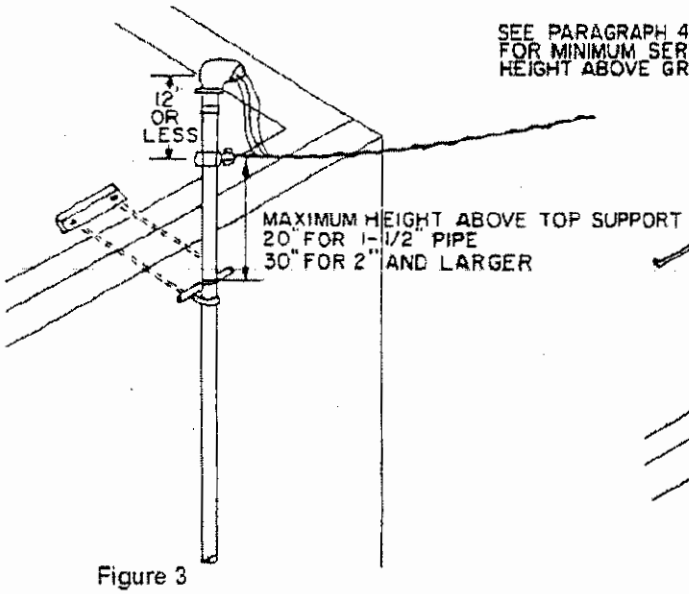

Figure 3
FLAT ROOF

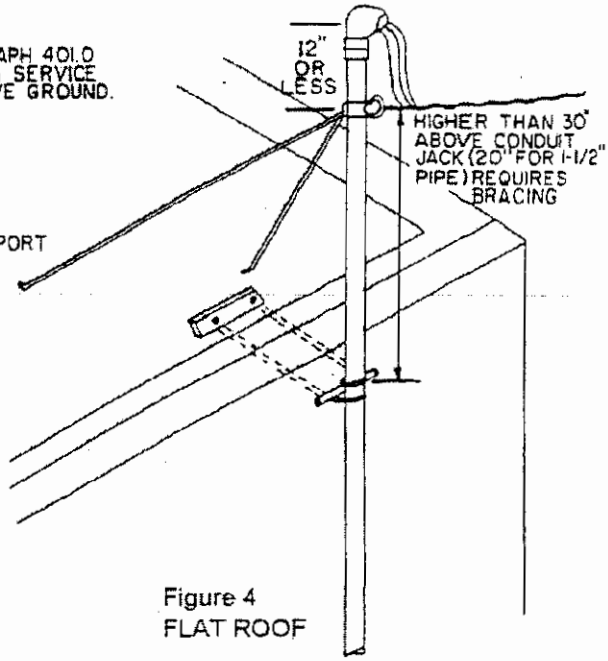

Figure 4
FLAT ROOF

401.5 ALTERNATE METHOD FOR POINT OF ATTACHMENT (WOOD FRAME STRUCTURE)

This method of service attachment is acceptable to APS if point of attachment is no higher than 50" above top support. Check the local municipal inspection agency for acceptance.

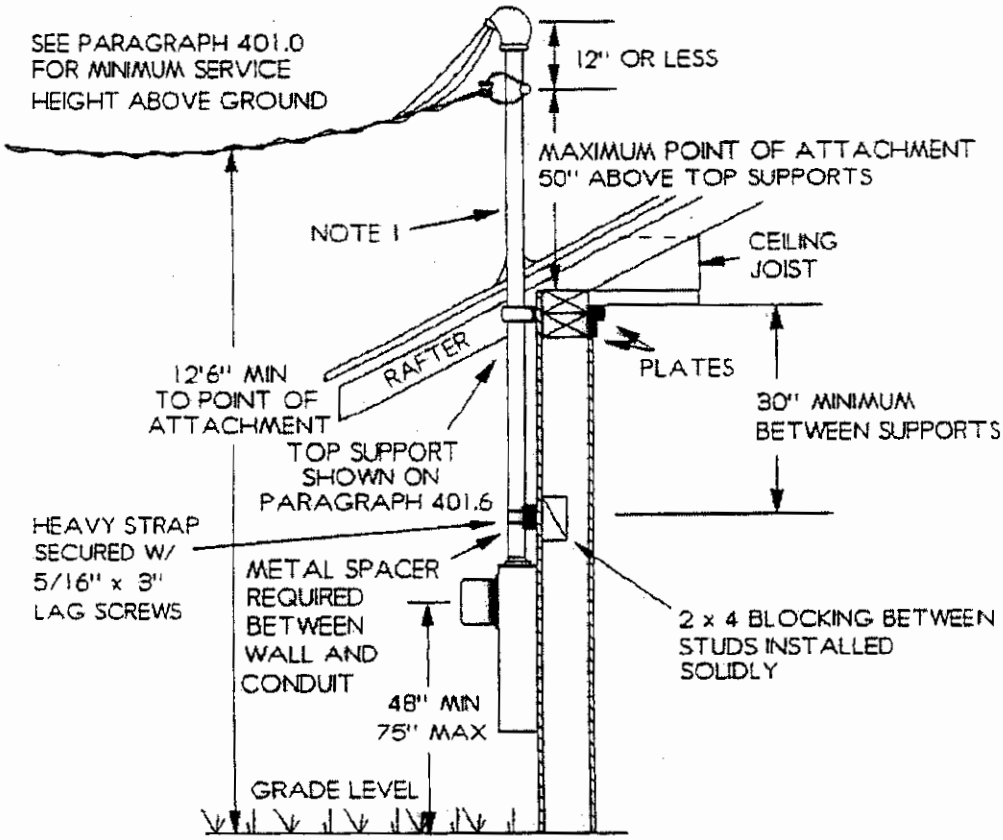

WOOD FRAME

Figure 2

NOTES:

1. Riser to be minimum 1-1/2" rigid steel conduit. EMT or Plastic shall not be used.
2. No couplings are permitted above the lowest point of support.
3. APS will not be responsible for any damage to the building caused by rain or structural failure.
4. If point of attachment is higher than 50" above top support then bracing is required. (See Paragraph 401.4-1)
5. Maximum service length for this installation is 100 feet.
6. See Section 300, Paragraph 301.6 for Electric to Gas clearances.

401.5 ALTERNATE METHOD FOR POINT OF ATTACHMENT (BLOCK STRUCTURE)

This method of service attachment is acceptable to APS if point of attachment is no higher than 50" above top support. Check the local municipal inspection agency for acceptance.

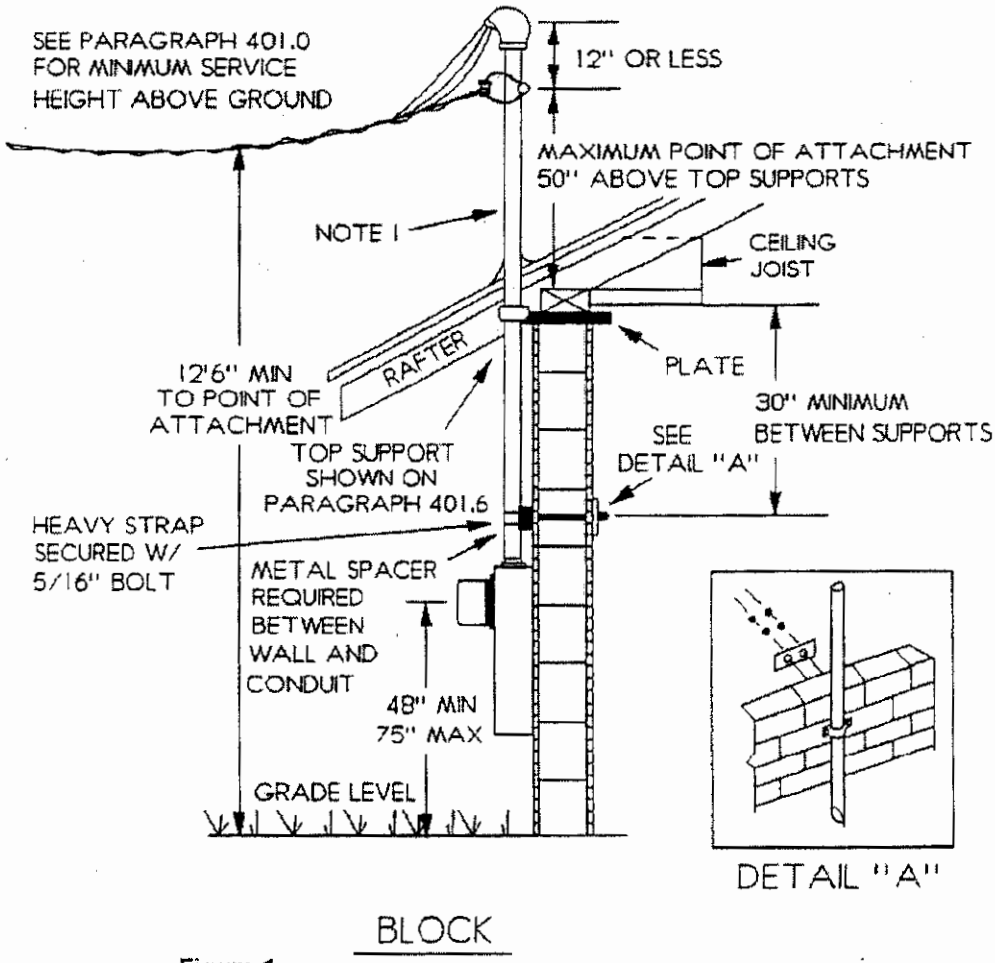

Figure 1

NOTES:

1. Riser to be minimum 1-1/2" rigid steel conduit. EMT or Plastic shall not be used.
2. No couplings are permitted above the lowest point of support.
3. APS will not be responsible for any damage to the building caused by rain or structural failure.
4. If point of attachment is higher than 50" above top support then bracing is required. (See Paragraph 401.4-1)
5. Maximum service length for this installation is 100 feet.
6. See Section 300, Paragraph 301.16 for Electric to Gas clearances.

401.6 UNIVERSAL SERVICE DROP CONDUIT BRACE

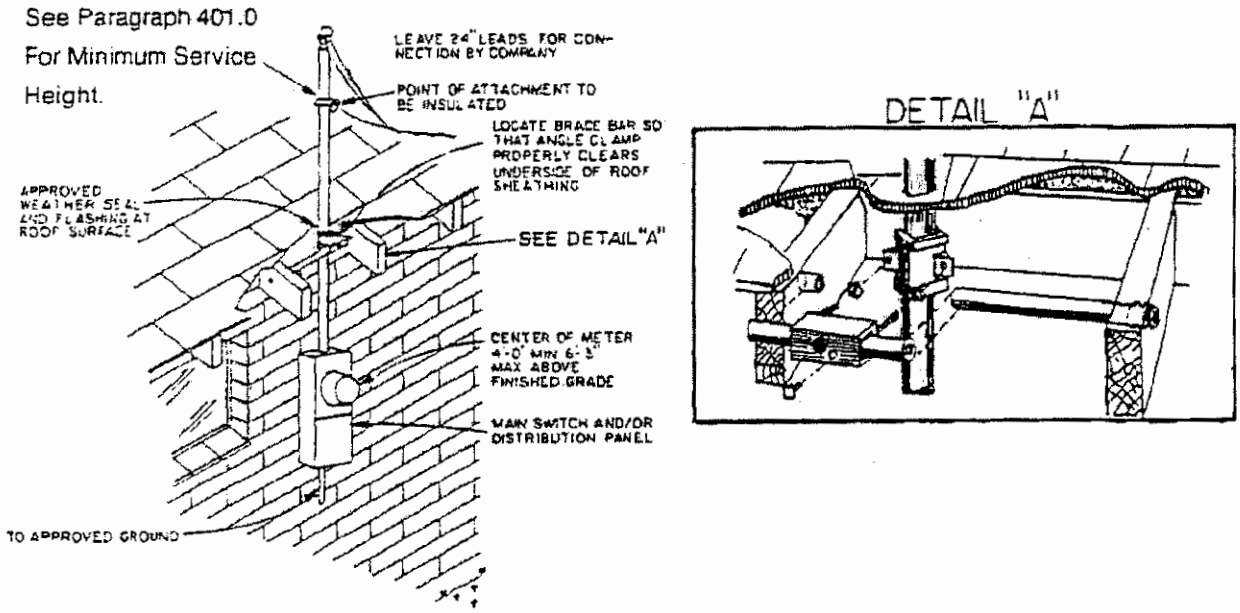

Figure 1

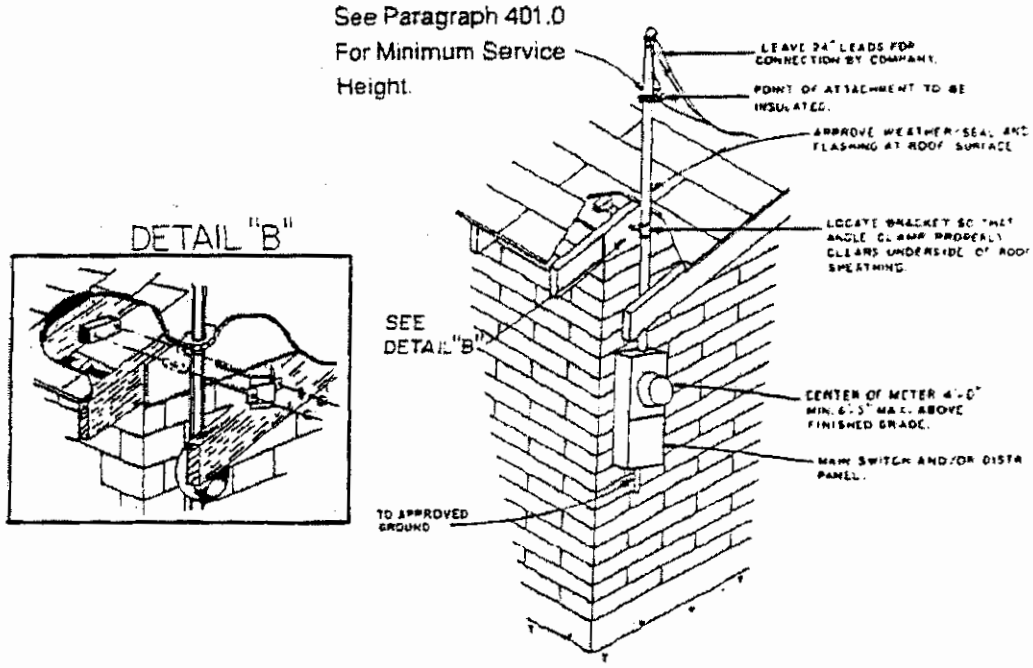

Figure 2

506.0 TYPICAL SERVICE ENTRANCE INSTALLATION (U.G.)

506.1 100 AMP - 400 AMP SINGLE PHASE THREE WIRE (RESIDENTIAL)

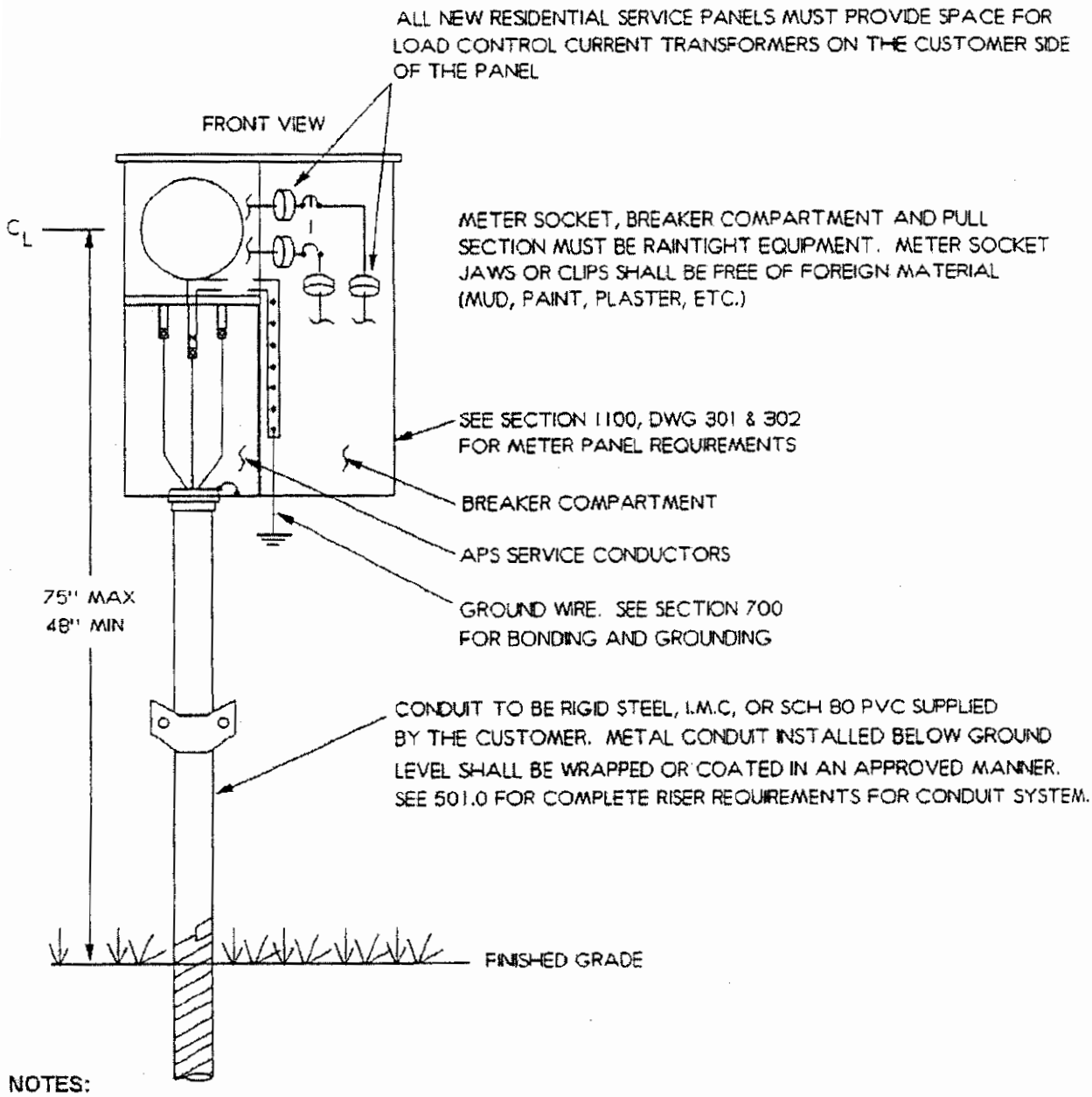

NOTES:

1. See Section 1100 Dwg. 301 & 302 for residential meter panel requirements.
2. Underground service conductors and connections to service terminals provided by APS.
3. This is the preferred installation for single family residential applications.