City of Tempe
P. O. Box 5002
31 East Fifth Street
Tempe, AZ 85280
480.350.8331
www.tempe.gov

Tempe

Community Development
Planning Division

February 28, 2011

Re: **Zoning and Development Code amendments**

Dear Customer,

Attached are Zoning and Development Code amendments adopted through January 27, 2011. Amendments are typically effective thirty (30) calendar days after the adoption date. Please make the following changes as noted below to this Code.

Amendments	Remove/Insert Pages
Updating Table of Contents	p. III-IV
Ordinance No. 2010.03, amending Section 1-304, Rio Salado Citizen Advisory Commission repealed	p. 1-11 to 1-14
Ordinance No. 2011.01, amending Sections 3-202, 3-302, and adding Section 3-426, Medical Marijuana.	p. 3-1 to 3-2 p. 3-9 to 3-10 p. 3-13 to 3-18.2 p. 3-35.2 to 3-36
Ordinance No. 2010.03, amending Section 5-103, pertaining to the Rio Salado Overlay District.	p. 5-3 to 5-4
Ordinance No. 2011.01, amending Section 6-313, pertaining to Security Plans	p. 6-25 to 6-26
Ordinance No. 2011.01, amending Sections 7-114, definitions for Medical Marijuana, Medical Marijuana Dispensary, and Medical Marijuana Cultivation Facility.	p. 7-19 to 7-20.2
Appendix J. Disposition Table	p. J-7 to J-8

Section 3-415 Mini-Warehouse/Rental Storage Facilities 3-30.1
Section 3-416 Mobile Homes 3-30.1
Section 3-417 Outdoor Retailing 3-30.2
Section 3-418 (Repealed) 3-32
Section 3-419 Residential Sales Office, Temporary 3-33
Section 3-420 Single-Family Residential Second Story Addition or Rebuild 3-33
Section 3-421 Wireless Telecommunication Facilities 3-33
Section 3-422 Amateur Radio Antennas 3-35
Section 3-423 Use Separation Requirements 3-35
Section 3-424 Tattoo, Body Piercing Establishment 3-35.1
Section 3-425 Outdoor Seating 3-35.2
Section 3-426 Medical Marijuana 3-35.3

Chapter 5 – Non-Conforming Use or Development

Section 3-501 Purpose 3-36
Section 3-502 General Provisions 3-36
Section 3-503 Legal Non-Conforming Development 3-36
Section 3-504 Legal Non-Conforming Use 3-36
Section 3-505 Discontinuance of a Legal Non-Conforming Use 3-36
Section 3-506 Damage to a Legal Non-Conforming Development..... 3-37
Section 3-507 Legal Non-Conforming Lots of Record 3-37

PART 4 – DEVELOPMENT STANDARDS

Chapter 1 – Development Standards Administration

Section 4-101 Purpose and Applicability 4-3
Section 4-102 General Regulations and Approval Criteria 4-3
Section 4-103 Reference to Other Design Guidelines and Standards 4-4

Chapter 2 – General Development Standards

Section 4-201 Purpose and Applicability 4-5
Section 4-202 Development Standards for Residential Districts 4-6
Section 4-203 Development Standards for Commercial and Mixed-Use Districts4-9
Section 4-204 Development Standards for Office/Industrial Districts 4-11
Section 4-205 Exceptions 4-12

Chapter 3 – Public Infrastructure

Section 4-301 Purpose and Applicability 4-13
Section 4-302 General Requirements for Public Improvements..... 4-13
Section 4-303 Transportation Improvements 4-14

Section 4-304 Sanitary Sewer, Storm Drainage, and Water System Improvements 4-16
Section 4-305 Private Utilities Coordination 4-17

Chapter 4 – Building Design

Section 4-401 Purpose and Applicability 4-18
Section 4-402 Public Safety Radio Amplification System 4-18
Section 4-403 Building Identification 4-18
Section 4-404 Building Height Step-Back 4-18
Section 4-405 Mechanical Equipment 4-19
Section 4-406 Employee Service Entrances and Exits 4-20
Section 4-407 Art in Private Development 4-20

Chapter 5 – Access and Circulation

Section 4-501 Purpose and Applicability 4-21
Section 4-502 Motor Vehicle Access and Circulation Standards 4-21
Section 4-503 Pedestrian and Bicycle Access and Circulation Standards 4-26

Chapter 6 – Parking

Section 4-601 Purpose and Applicability 4-29
Section 4-602 General Parking Standards 4-29
Section 4-603 Parking Ratios 4-31
Section 4-604 Shared Parking 4-36
Section 4-605 Parking Affidavit 4-36
Section 4-606 Parking Area Dimensions 4-36

Chapter 7 – Landscape and Walls

Section 4-701 Purpose and Applicability 4-39
Section 4-702 General Landscape Standards 4-39
Section 4-703 Street Frontage Landscape Standards 4-41
Section 4-704 Parking Facility Landscape Standards 4-42
Section 4-705 Pedestrian Amenities 4-43
Section 4-706 Screens, Walls, and Access Control Landscapes 4-44

Chapter 8 – Lighting

Section 4-801 Purpose and Applicability 4-48
Section 4-802 Photometric Plan 4-48
Section 4-803 Lighting Standards 4-48
Section 4-804 Prohibited Lighting 4-51
Section 4-805 Exemptions 4-51

C. Community Development Director – Appeals. Any person aggrieved by a decision of the Community Development Director, or designee, under this Code may file an appeal within fourteen (14) calendar days after the Community Development Director, or designee, has provided a written notice with their decision, in accordance with Part 6, Chapter 8, Appeals.

D. Community Development Director – Reconsideration. Reconsideration of the Community Development Director, or designee, decisions shall comply with Part 6, Chapter 7, Re-Application and Reconsideration of Decisions.

Section 1-303 Zoning Administrator.

A. Zoning Administrator – Creation and Purpose. The Zoning Administrator is the Community Development Director or designee. The Zoning Administrator is created to interpret the meaning and intent of the General Plan and this Code.

State law reference – A.R.S. 9-462.05 Enforcement. (Zoning Administrator creation)

B. Zoning Administrator – Duties and Powers. The Zoning Administrator shall have the duty to carry out the provisions and intent of the General Plan and this Code. The Zoning Administrator shall have the power to interpret and enforce this Code.

1. Interpretation of this Code includes, but is not limited to, clarification of intention, determination of zoning classifications of land uses not specified in this Code, the delegation of processing procedures and requirements, and enforcement of Code provisions. The Zoning Administrator shall keep a record of interpretations made pursuant to this section. The record of interpretations shall be available to the public;

2. The Zoning Administrator may appoint representatives of the Community Development Department to enforce provisions of this Code; and

3. Any land use that is unspecified in this Code and not classified by the Zoning Administrator is prohibited in any district.

C. Zoning Administrator – Appeals. Any person aggrieved by a decision of the Zoning Administrator under this Code may file an appeal to the Board of Adjustment, or the Joint Review Committee, as applicable, within fourteen (14) calendar days after the Zoning Administrator has rendered its decision, in accordance with Part 6, Chapter 8, Appeals.

D. Zoning Administrator - Reconsideration. Reconsideration of Zoning Administrator decisions shall comply with Part 6, Chapter 7, Re-Application and Reconsideration of Decisions.

Section 1-304 Special Review Commissions/Committees.

A. Historic Preservation Commission.

1. **Creation and Purpose.** The Tempe Historic Preservation Commission is created by Tempe City Code to act in an advisory capacity to the City Council in all matters concerning historic preservation. The mission of the Tempe Historic Preservation Commission is to provide protection for significant properties and archeological sites which represent important aspects of Tempe's heritage; to enhance the character of the community by taking such properties and sites into account during development, and to assist owners in the preservation and restoration of their properties.

2. **Duties and Powers.** For the purpose of this Code, the Historic Preservation Commission shall have the powers to:

   a. Review applications for the designation of landmarks, historic properties and historic districts and make recommendations to the Development Review Commission and City Council. Such review shall be based on the criteria as specified in § 14A-4 of the City Code; and

   b. Review and make decisions on applications for proposed alterations, new construction, demolition or removal affecting landmarks, historic properties or properties located within an historic district. Such review shall be based on the criteria as specified in § 14A-6 of the City Code.

   c. Any recommendation by the Historic Preservation Commission relative to such application will be forwarded to the appropriate decision-making body as a part of the staff report regarding the request.

3. **Organization.** For Commission organization refer to City Code Chapter 14A. The Historic Preservation Commission shall adopt rules of procedure consistent with the provisions of this Code for the conduct of its business and procedure.

City Code reference – See TCC §14A, Historic Preservation Commission

Section 1-305 Hearing Officer.

A. Hearing Officer – Creation and Purpose. The Hearing Officer shall be appointed by the Community Development Director or designee. The Hearing Officer shall hold a public hearing or public meeting to review and approve, continue, deny, approve with conditions, or to the extent applicable, enter the appropriate order, the following:

B. Hearing Officer – Duties and Powers. The Hearing Officer shall have the duty to carry out the provisions and intent of the General Plan and this Code. The Hearing Officer shall have the power to hold a public hearing to review and approve, continue, deny, or approve with conditions, the following:

1. Use permit applications pursuant to Section 6-308;

2. Variance applications pursuant to Section 6-309; and

3. Abatements pursuant to Chapter 21 of the Tempe City Code and Section 6-310.

The Hearing Officer may in connection with any application, impose conditions deemed necessary in order to fully carry out the provisions and intent of this Code, pursuant to Part 6, Chapter 6, Conditions of Approval. Violation of any Hearing Officer condition shall be a violation of this Code.

C. Hearing Officer – Procedure. Public hearings conducted by the Hearing Officer shall be open to the public and conducted in accordance with Part 6, Chapter 5, Public Meetings and Public Hearings. The public shall be given an opportunity to testify orally or in writing. The minutes of its proceedings in accordance with Section 6-503, shall be kept by the City Clerk as a public record.

D. Hearing Officer – Appeals. Any person aggrieved by a decision of the Hearing Officer under this Code may file an appeal to the Board of Adjustment, Joint Review Committee, or the Development Review Commission as applicable, within fourteen (14) calendar days after the Hearing Officer has rendered its decision, in accordance with Part 6, Chapter 8, Appeals. Appeals of the decisions of the Hearing Officer shall be heard de novo by the Board of Adjustment, Development Review Commission, Joint Review Committee, or the City Council, as applicable.

State law reference — A.R.S. §9-462.08 Hearing officer

PART 3 – LAND USE

Chapter 1 – Permitted Uses in Residential Districts

Section 3-101 Purpose and Applicability
Section 3-102 Permitted Uses in Residential Districts

Chapter 2 – Permitted Uses in Commercial and Mixed-Use Districts

Section 3-201 Purpose and Applicability
Section 3-202 Permitted Uses in Commercial and Mixed-Use Districts

Chapter 3 – Permitted Uses in Office/Industrial Districts

Section 3-301 Purpose and Applicability
Section 3-302 Permitted Uses in Office/Industrial Districts

Chapter 4 – Special Use Standards

Section 3-401 Accessory Buildings, Uses and Structures
Section 3-402 Accessory Dwellings
Section 3-403 Adult-Oriented Businesses
Section 3-404 Agricultural Uses
Section 3-405 Bed and Breakfast
Section 3-406 Boutique
Section 3-407 Child Care, In Home
Section 3-408 Drive-Through Facilities
Section 3-409 Group Homes for Adult Care, Persons with Disabilities, and Child Shelter
Section 3-410 Room Addition
Section 3-411 Guest Quarters
Section 3-412 Home Occupation
Section 3-413 Hospitals, Sanitariums, Nursing Homes
Section 3-414 Live-Work
Section 3-415 Mini-Warehouse/Rental Storage Facilities
Section 3-416 Mobile Homes
Section 3-417 Outdoor Retailing
Section 3-418 (Repealed)
Section 3-419 Residential Sales Office, Temporary
Section 3-420 Single-Family Residential Second Story Addition or Rebuild
Section 3-421 Wireless Telecommunication Facilities
Section 3-422 Amateur Radio Antennas
Section 3-423 Use Separation Requirements
Section 3-424 Tattoo, Body Piercing Establishment
Section 3-425 Outdoor Seating

Section 3-426 Medical Marijuana

Chapter 5 – Non-Conforming Use or Development

Section 3-501 Purpose
Section 3-502 General Provisions
Section 3-503 Legal Non-Conforming Development
Section 3-504 Legal Non-Conforming Use
Section 3-505 Discontinuance of a Legal Non-Conforming Use
Section 3-506 Damage to a Legal Non-Conforming Development
Section 3-507 Legal Non-Conforming Lots of Record

Section 3-202 Permitted Uses in Commercial and Mixed-Use Districts

Table 3-202A identifies land uses according to permit status. See key below the table:

Table 3-202A – Permitted Land Uses (R/O, CSS, CC, PCC, RCC)

Uses	Status of Use District					
	R/O	CSS	CC	PCC-1	PCC-2	RCC
Accessory Use (see Section 7-102, Definitions)	P	P	P	P	P	P
Animal Kennel	N	U	U	U	U	U
Amateur Radio Antennas [Section 3-422]						
35 feet in height or less	S	S	S	S	S	S
Over 35 feet in height	U(S)	U(S)	U(S)	U(S)	U(S)	U(S)
Brewery, ancillary to a bar (a)	N	P	P	P	P	P
Card room (a) [See Section 6-313]	N	S	S	S	S	S
Cemeteries, Crematoriums and Mausoleums	N	U	U	U	U	N
Childcare Centers: Nursery Schools, Day Care Centers, similar	P	P	P	P	P	P
Clinic (medical, dental, veterinary (small animals))	P	P	P	P	P	P
Plasma donation center	U	U	U	U	U	U
Clubs						
Bar (indoor or outdoor), tavern, or nightclub (a)	N	U	U	U	U	P
Lodge or similar organization (a)	N	P	P	P	P	P
Teen night club (a)	N	U	U	U	U	U
Conference/Assembly (convention center)	N	P	P	P	P	P
Construction Offices and Sheds, Appurtenant Signs and Storage; Temporary – incidental to a construction project only for the duration of such project; not to exceed 24 months	P	P	P	P	P	P
Entertainment	N	U	U	U	U	P
Amusement businesses (a)	N	U	U	U	U	P
Outdoor (permanent use)	N	U	U	U	U	U
Theater or similar use	N	P	P	P	P	P
Fitness Centers: e.g. Heath Club, Fitness Studio	N	P	P	P	P	P
Heliport	N	U	U	U	U	U
Hospitals, Sanitariums, Nursing Homes: e.g. Orphanages, Institutions [Section 3-413]	N	U(S)	U(S)	U(S)	U(S)	U(S)

Key:

P = Permitted
S = Permitted with special standards or limitations
U = Use permit required
N = Not permitted
R/O = Residential/Office
(a) Security plan required. See Section 6-313.

CSS = Commercial Shopping and Services (previously designated as CCR, C-1, C-2 districts)
CC = City Center (previously designated as CCD)
PCC-1 = Planned Commercial Center Neighborhood
PCC-2 = Planned Commercial Center Comprehensive
RCC = Regional Commercial Center

Table 3-202A – Permitted Land Uses (R/O, CSS, CC, PCC, RCC)

Uses	Status of Use District					
	R/O	CSS	CC	PCC-1	PCC-2	RCC
Hotels and Motels (a)	N	U	P	U	U	P
Live-Work [Section 3-414]	S	N	S	U(S)	U(S)	N
Medical Marijuana cultivation [Section 3-426]	N	N	N	N	N	N
Medical Marijuana dispensary (without cultivation) [Section 3-426]	N	S	S	S	S	S
Mini-Warehouse/Rental Storage Facilities [Section 3-415]	N	U(S)	N	U(S)	U(S)	S
Offices	P	P	P	P	P	P
Outdoor Storage of equipment, goods, or materials	N	N	N	U	U	U
Parking Facilities, Commercial						
Surface	N	U	U	P	P	P
Structure	N	U	P	U	U	P
Places of Worship – (except tents and other temporary structures or buildings not permitted) including childcare, Sunday school uses which are ancillary to main use	P	P	P	P	P	P
Childcare center, private or charter school not ancillary to main use	U	U	U	U	U	U
Public Uses						
Civic facilities (e.g., post office, library, city office, customer serving)	P	P	P	P	P	P
Municipal Facilities (maintenance, repair and storage)	N	U	U	U	U	U
Open space, parks, similar uses (See also, Schools)	P	P	P	P	P	P
Radio and Television Studios with Receiving and Transmitting Towers	N	U	N	U	U	P
Recycling centers						
Large	N	N	N	N	N	N
Small	P	P	P	P	P	P
Resale Items	N	U	U	U	U	U
Antiques	N	U	U	U	U	U
Pawn Shops	N	U	U	U	U	U
Second Hand Stores	N	U	U	U	U	U
Residential, caretaker residence	P	P	P	P	P	P
Residential (all types)	P	U	P	U	U	U

Key:

P = Permitted
S = Permitted with special standards or limitations
U = Use permit required
N = Not permitted
R/O = Residential/Office
(a) Security plan required. See Section 6-313.

CSS = Commercial Shopping and Services (previously designated as CCR, C-1, C-2 districts)
CC = City Center (previously designated as CCD)
PCC-1 = Planned Commercial Center Neighborhood
PCC-2 = Planned Commercial Center Comprehensive
RCC = Regional Commercial Center

Table 3-202B – Permitted Land Uses (MU-1, MU-2, MU-3, MU-4 and MU-Ed)

Uses	Districts				
	MU-1	**MU-2**	**MU-3**	**MU-4**	**MU-Ed**
Accessory Use	P	P	P	P	P
Amateur Radio Antennas [Section 3-422]					
35 feet in height or less	S	S	S	S	S
Over 35 feet in height	U(S)	U(S)	U(S)	U(S)	U(S)
Bed and Breakfast [Section 3-405]	U(S)	U(S)	U(S)	U(S)	U(S)
Brewery, ancillary to a bar (a)	P	P	P	P	U
Card room (a) [See Section 6-313]	S	S	S	S	S
Childcare, In-Home					
Not to exceed 6 children [Section 3-407]	S	S	S	S	U(S)
7 to 10 children [Section 3-407]	U(S)	U(S)	U(S)	U(S)	U(S)
Childcare Centers: Nursery Schools, Day Care Centers, similar	P	P	P	P	P
Clinic (medical, dental, veterinary (small animals))	P	P	P	P	U
Plasma donation center	U	U	U	U	U
Clubs					
Bar, tavern, nightclub (a)	U	U	U	P	U
Lodges & similar organization (a)	U	P	P	P	U
Teen nightclub (dance hall) (a)	N	N	U	P	U
Conference/Assembly (Convention Center)	P	P	P	P	P
Construction Offices and Sheds, Appurtenant Signs and Storage; Temporary – incidental to a construction project only for the duration of such project, not to exceed 24 months	P	P	P	P	P
Entertainment	U	U	P	P	P
Amusement businesses (arcade) (a)	N	U	U	P	P
Outdoor/permanent use	N	N	N	N	P
Theater or similar use	U	U	U	P	P
Fitness Centers: e.g. Health Club, Fitness Studio	P	P	P	P	P
Hospitals, Sanitariums, and Nursing Homes: e.g. Orphanages, Institutions [Section 3-413]	N	N	U(S)	U(S)	U(S)
Hotels and Motels (a)	N	U	P	P	P

Key:

P = Permitted
S = Permitted with special standards or limitations
U = Use permit required
N = Not permitted

MU-1 = Low – Medium Density District
MU-2 = Medium Density District
MU-3 = Medium – High Density District
MU-4 = High Density District (previously designated as MG district)
MU-Ed = Mixed Use Educational District

(a) Security plan required. See Section 6-313.

Table 3-202B – Permitted Land Uses (MU-1, MU-2, MU-3, MU-4 and MU-Ed)

Uses	Districts				
	MU-1	**MU-2**	**MU-3**	**MU-4**	**MU-Ed**
Live-Work [Section 3-414]	S	S	S	S	S
Medical Marijuana cultivation [Section 3-426]	N	N	N	N	N
Medical Marijuana dispensary [Section 3-426]	N	N	N	N	N
Mini-Warehouse/Rental Storage Facilities [Section3-415]	N	N	N	N	N
Offices	P	P	P	P	P
Outdoor Storage of equipment, goods, or materials	N	N	N	N	N
Parking Facilities, Commercial					
Surface	N	N	U	U	P
Structure	N	N	U	U	P
Places of Worship (except tents and other temporary structures or buildings not permitted) including childcare, Sunday school uses which are ancillary to main use	P	P	P	P	P
Childcare center, private school, or charter not ancillary to main use	U	U	U	U	P
Public Uses					
Civic facilities (e.g., post office, library, city office, customer serving)	P	P	P	P	P
Municipal Facilities (maintenance, repair and storage)	N	N	N	N	P
Open space, parks, similar uses (See also, Schools)	P	P	P	P	P
Recycling centers					
Large	N	N	N	N	N
Small	P	P	P	P	P
Resale Items					
Antiques	U	U	U	U	U
Pawn Shops	N	N	N	N	N
Second Hand Stores	N	N	N	N	U
Residential – of a caretaker or operator employed on the premises	P	P	P	P	P
Residential (all types)	P	P	P	P	P
Restaurants	P	P	P	P	P
Entertainment as accessory use (a)	U	U	U	P	P
Outdoor seating [Section 3-425]	S	S	S	S	S

Key:

P = Permitted
S = Permitted with special standards or limitations
U = Use permit required
N = Not permitted
(a) Security plan required. See Section 6-313.

MU-1 = Low – Medium Density District
MU-2 = Medium Density District
MU-3 = Medium – High Density District
MU-4 = High Density District (previously designated as MG district)
MU-Ed = Mixed Use Educational

Table 3-202B – Permitted Land Uses (MU-1, MU-2, MU-3, MU-4 and MU-Ed)

Uses	Districts				
	MU-1	MU-2	MU-3	MU-4	MU-Ed
With drive-in or drive-through [Section 3-408]	N	N	U(S)	S	U(S)
With liquor license (a)	P	P	P	P	P
Retail Sales [See Appendix M.]	P	P	P	P	P
Convenience Store (a)	P	P	P	P	U
Drive-through [Section 3-408]	N	N	U(S)	S	U(S)
Gas/fuel sales (a)	N	N	N	N	U
Gun shop	U	U	U	U	U
Liquor store	U	U	U	U	U
Outdoor retailing [Section 3-417]	U(S)	U(S)	U(S)	U(S)	S
Tire store	U	U	U	U	U
Tobacco retailer [Section 3-423]	U(S)	U(S)	U(S)	U(S)	U(S)
Schools					
Charter	P	P	P	P	P
Instructional	U	U	U	U	P
Private	U	U	U	U	P
Public	P	P	P	P	P
Vocational	U	U	U	U	P
Services [See Appendix M.]	P	P	P	P	P
Auto title loan [Section 3-423]	U(S)	U(S)	U(S)	U(S)	U(S)
Barber/Beauty Salon	P	P	P	P	U
Employment agency	U	U	U	U	U
Financial institutions (without drive through)	P	P	P	P	P
Financial institutions, non-chartered [Section 3-423]	U(S)	U(S)	U(S)	U(S)	U(S)
Massage establishment	U	U	U	U	U
Mortuary	U	U	U	U	U
Personal or business (e.g. drycleaner, small appliance repair)	P	P	P	P	P
Photography Studio, except adult-oriented businesses	P	P	P	P	P
Vehicle base service (courier, delivery service, taxi and ambulance dispatch)	N	N	N	N	U
Tattoo, body piercing establishment [Section 3-424]	N	N	U(S)	U(S)	N
Tutoring/After school learning center	P	P	P	P	P
With drive through (e.g. dry cleaner) [Section 3-408]	N	S	S	S	U(S)
Similar Uses [Section 6-301]	S	S	S	S	S
Wireless Telecommunication Facilities [Section 3-421]	U(S)	U(S)	U(S)	U(S)	U(S)

CHAPTER 3 – PERMITTED USES IN OFFICE/INDUSTRIAL DISTRICTS

Section 3-301 Purpose and Applicability.

A. Purpose. The *office*/industrial districts are designed to provide for *office*/industrial business involved in research, warehousing, *wholesaling*, and manufacturing. The facilities range from administrative and research institutions to assembly and production. The *office*/industrial districts allow a range of industrial uses, as expressed below.

B. Applicability. Industrial uses are accommodated in three districts:

1. Light Industrial District (LID) (previously designated as IBD district). Administrative and research industries, *offices*, and limited manufacturing to provide opportunities for employment and for protection to neighborhood residential areas;

2. General Industrial District (GID) (previously designated as I-1 and 1-2 districts). *Office* uses, warehousing, *wholesaling*, assembling and manufacturing of *building* materials, machinery and other commodities to provide employment centers and production; and

3. Heavy Industrial District (HID) (previously designated as I-3 district). Intensive manufacturing, fabricating, and storage to provide for concentrated industrial uses.

C. Applicability of Other Code Chapters. Uses permitted under this chapter shall conform to the *development* standards in Part 4 and the application procedures in Part 6, as applicable. Uses shall also conform to any *overlay district* requirements that are applicable. Uses permitted with special standards or limitations ("S" type uses) shall comply with the standards in Part 3, Chapter 4, Special Use Standards. Zoning Administrator opinions may also apply. See Appendix H.

City code reference—See TCC §14A, Historic Preservation Ordinance.

Section 3-302 Permitted Uses in Office/Industrial Districts.

Table 3-302A identifies land uses according to permit status. See key below the table:

Table 3-302A Permitted Land Uses (LID, GID, HID)

Uses	Districts		
	LID	GID	HID
Accessory Use	P	P	P
Adult Businesses [Section 3-403]	N	S	S
Amateur Radio Antennas [Section 3-422]			
35 feet in height or less	S	S	S
Over 35 feet in height	U(S)	U(S)	U(S)
Animal Kennels, and Animal Hospitals	N	P	P
Ball Bearing, Boxes or Cabinets Manufacturing	N	U	P
Cement and Paving Material Mixing Plant	N	N	P
Cemetery, Crematorium, Mausoleum	N	U	U
Childcare, center: nursery school, daycare center, similar	N	U	U
Chocolate, Cocoa or Coffee Roasting or Manufacturing	N	U	P
Clinics: Medical, Dental and Veterinary	P	P	P
Computer Centers, including Computer Hotels and Similar Technology Facilities	P	P	P
Commercial Uses – and all other uses under Table 3-202A "Permitted land Uses", unless otherwise specified in this table (except outdoor display)	U	U	U
Construction Offices and Sheds, Appurtenant Signs and Storage; Temporary – incidental to a construction project only for the duration of such project, not to exceed 24 months	P	P	P
Dispatching, Weighing Station	N	P	P
Electronic Instruments and Devices, Computers, Assembling and Manufacturing	P	P	P
Entertainment	N	U	U
Amusement businesses (a)	N	U	U
Outdoor (permanent use)	N	U	U
Theater or similar use	P	P	P

Key:

P = Permitted
S = Permitted with special standards or limitations
U = Use permit required
N = Not permitted

LID = Light Industrial District (previously IBD district)
GID = General Industrial District (previously I-1 and I-2 districts)
HID = Heavy Industrial District (previously I-3 district)
(a) Security plan required. See Section 6-313.

Table 3-302A Permitted Land Uses (LID, GID, HID)

Uses	Districts		
	LID	GID	HID
Exterminator and Insect Poison Manufacturing	N	N	P
Storage, Wholesale and Distribution	N	P	P
Extraction of Sand, Gravel and Other Natural Resources	N	N	U
Farming, Landscaping and Agricultural Supplies and Equipment, Wholesaling and Storage	N	P	P
Foundry Casting Light-Weight, Nonferrous Metal, not Causing Noxious Odors or Fumes	N	U	P
Fuel Distributing Station, Gasoline (bulk plant)	N	U	P
Gasoline and Petroleum Bulk Storage Tanks	N	N	P
Hospitals, Sanitariums, Nursing Homes: e.g. Orphanages, Institutions [Section 3-413]	U(S)	U(S)	U(S)
House-Movers, Equipment Storage or Wrecking Yards	N	N	P
Ice Manufacturing and Cold Storage	N	U	P
Industrial, Scientific, Bio-Technology or Business Research, Development and Testing Laboratories, and Offices	P	P	P
Junkyards	N	N	P
Machine shops	N	P	P
Medical Marijuana cultivation [Section 3-426]	N	S	S
Medical Marijuana dispensary [Section 3-426]	S	S	S
Manufacturing, not causing noxious odors, fumes, noise, dust or vibration	N	P	P
Mini-Warehouse/Rental Storage Facilities [Section 3-415]	N	U(S)	S
Motion Picture/Recording Studios	P	P	P
Offices	P	P	P
Outdoor			
Retailing [Section 3-403]	N	U(S)	U(S)
Storage of equipment, goods, or materials [Section 4-706(F)]	N	S	S
Places of Worship (except tents and other temporary structures or buildings not permitted) including childcare, Sunday school uses which are ancillary to main use	P	P	P
Childcare center, private school or charter school not ancillary to main use	U	U	U

Table 3-302A Permitted Land Uses (LID, GID, HID)

Uses	Districts		
	LID	GID	HID
Public Uses			
Civic Facilities (e.g., post office, library, city office, customer serving)	P	P	P
Municipal Facilities (maintenance, repair and storage)	N	P	P
Open space, parks, similar uses (See also, Schools)	P	P	P
Recycling centers			
Large	N	U	P
Small	P	P	P
Residence – of a caretaker or operator employed on the premises; such residence may include the family of the caretaker	P	P	P
Mobile Home or Trailer	U	U	U
Single- or Multi-Family Dwelling	N	N	N
Retail uses – directly related to the primary industrial use, not to exceed 15% of the total building area's primary industrial use.	P	P	P
Retail and Restaurant Uses – and all other uses under Table 3-202A, "Permitted Land Uses", unless otherwise specified in this table (except outdoor display)	U	U	U
Rock Crushing, Sand Blasting Yard	N	N	P
Schools			
Charter	P	P	P
Instructional	N	U	U
Private	N	U	U
Public	P	P	P
Vocational	N	U	U
Similar Uses [Section 6-301]	S	S	S
Stadium, Arena	N	U	P

Key:

P = Permitted
S = Permitted with special standards or limitations
U = Use permit required
N = Not permitted

LID = Light Industrial District (previously IBD district)
GID = General Industrial District (previously I-1 and I-2 districts)
HID = Heavy Industrial District (previously I-3 district)

Table 3-302A Permitted Land Uses (LID, GID, HID)

Uses	Districts		
	LID	GID	HID
Vehicle			
Auto Body Repair	N	P	P
Auto Salvage, parts, supplies or wrecking	N	N	P
Car Wash	N	U	U
Repair	N	P	P
Sales/Rental (indoor or outdoor)	N	U	U
Service Station	N	U	U
Towed Vehicle Storage	N	P	P
Warehouse, including distribution centers	N	P	P
Wholesaling, Repairing, Storage, and Rental Activities – in conjunction with a permitted use	N	P	P
Wireless Telecommunication Facilities [Section 3-421]	U(S)	U(S)	U(S)
Wood Products, Manufacturing	N	U	P

Key:

P = Permitted
S = Permitted with special standards or limitations
U = Use permit required
N = Not permitted

LID = Light Industrial District (previously IBD district)
GID = General Industrial District (previously I-1 and I-2 districts)
HID = Heavy Industrial District (previously I-3 district)

Section 3-425 Outdoor Seating.

A. Purpose and Applicability. This section is applicable to all outdoor seating areas designated on site or within the public right of way for use by a restaurant, bar or other related establishments providing outdoor seating.

B. Procedure. All outdoor seating shall first require review through a minor Development Plan Review application, pursuant to Section 6-306. Furniture, materials, and other related exterior modifications are included in the review process.

1. Use of outdoor seating within the public right of way shall require an encroachment permit and a right of way permit for construction performed, authorized by the City Engineer or designee;

2. Businesses utilizing the outdoor seating area for liquor consumption shall require a liquor license and a security plan, pursuant to Tempe City Code, Chapter 4, Alcoholic Beverages and Chapter 26, Article V, Security Plans; and

3. If liquor consumption is granted within the outdoor seating, the request shall comply with all Arizona revised Statutes and their related regulations, as amended, including liquor licensing and designated non-smoking areas.

C. Standards. Outdoor seating areas are subject to the following requirements:

1. Advertising or signs of any sort in the right-of-way or on site shall conform to the requirements pursuant to Part 4, Chapter 9, Signs, as applicable;

2. The outdoor seating area shall be a clearly defined area, which creates a clear and continuous division between the use area and the public portion of the sidewalk; and

3. Shall not obstruct sidewalk pedestrian traffic or create public health and safety hazards and shall leave a minimum clear distance of six (6) feet of sidewalk pedestrian area in all places. All walkways within the confines of the seating shall be level with the public sidewalk and accessible for the physically disabled.

Section 3-426 Medical Marijuana.

A. Purpose. The purpose of this section is to implement Arizona Revised Statutes, Title 36, Chapter 28.1; entitled "Arizona Medical Marijuana Act".

Cross reference—See also the following definitions in Part 7 of this Code: *medical marijuana, medical marijuana cultivation facility, and medical marijuana dispensary.*

B. Location Requirements. A *medical marijuana dispensary,* without *cultivation*, is allowed in the CSS, CC, PCC-1, PCC-2, RCC, and LID districts. A *medical marijuana dispensary* or *cultivation facility* is allowed in the GID and HID zoning districts. The locations are limited to the following:

1. A *medical marijuana dispensary* or *medical marijuana cultivation facility* shall not be operated or maintained on a parcel within 1,320 feet, measured by a straight line in all directions, without regard to intervening structures or objects, from the nearest point on the property line of a parcel containing the following:

   a. Another *medical marijuana dispensary* or *cultivation facility*;

   b. A child care facility;

   c. A *charter school, private school, or public school,* which provides elementary or secondary education;

   d. A *church*, synagogue, temple or similar religious worship *building*; or

   e. A public park, library, or public community *building*.

2. A *medical marijuana dispensary* or *medical marijuana cultivation facility* shall not be operated or maintained on a parcel within five hundred (500) feet from a residential zoning district or the property line of a parcel solely devoted to a residential use in any zoning district, measured by a straight line in all directions, without regard to intervening structures or objects, from the nearest point of the property line of a parcel containing such use.

3. *Medical marijuana cultivation* for a caregiver or patient's residence in a residential district is not permitted, unless sufficient evidence exists that the location is greater than twenty-five (25) miles from a *medical marijuana dispensary* within the State of Arizona.

C. Operation Requirements. Any *medical marijuana dispensary* or *cultivation facility*, except within a residential home, shall comply with the following requirements, as well as those contained within Arizona Revised Statutes, Title 36, Chapter 28.1:

1. The business shall be located in a permanent building, with an engineered foundation that meets Tempe Building Code, and not located in a *mobile home*, *trailer*, cargo container, motor vehicle, or similar personal property.

2. Only one (1) secured exterior doorway shall be allowed for the purpose of ingress or egress. The maximum size tenant space shall be limited to the square footage dedicated for such use with one exit. Any existing doorways beyond this allowance shall be permanently closed by removing the door and frame and filling in the opening with permanent construction to match the exterior wall.

3. The business and tenant space must comply with Tempe's applicable Building Code and Fire Code requirements.

4. Drive-through facilities are prohibited.

5. The *medical marijuana dispensary* is limited to the hours of operation not earlier than 8:00 a.m. and not later than 6:00 p.m.

6. *Medical marijuana* remnants or bi-products shall be disposed of according to an approved plan and not placed within the facilities exterior refuse containers.

7. There shall be no emission of dust, fumes, vapors, or odors into the environment from the premise.

8. A security plan is required, which shall include, but is not limited to, the following:

    a. The single doorway for the facility shall provide a security vision panel pursuant to Section 4-406, Employee Service Entrances and Exits, or a 180 degree rotatable viewer. If doorway is transparent, the door shall be designed with a material that is either impact resistant or restricts entry by means of a wrought iron gate;

    b. Closed circuit television cameras, operating 24 hours a day, shall be provided at the building's exterior entrance and inside the building at a designated service area;

    c. All lighting for the site shall be brought into conformance with the current lighting standards identified in Part 4, Chapter 8, Lighting. The building entrance of the business shall be illuminated from dusk till dawn activated by photocell relay to the lighting controller;

    d. No one under the age of twenty-one (21) shall enter the establishment; and

    e. Any person, prior to entering the establishment, shall remove all hats, sunglasses or other similar objects, to avoid obstruction of physical identification.

D. Use Acceptance. A zoning administrative application shall be processed, certifying that all City of Tempe regulations for the *medical marijuana dispensary or cultivation facility* are in compliance with the provisions set forth in Section 3-426 of this Code. The use shall not commence without the zoning administrator, or designee, acceptance letter. the application shall include, but is not limited to, the following items:

1. A project submittal form with applicable fee;

2. The property owner's letter of authorization for the use;

3. The name and location of the dispensary's off-site *medical marijuana cultivation facility*, if applicable;

4. A map showing the location in compliance with the separation requirements listed in Section 3-426(B);

5. A copy of operating procedures adopted in compliance with A.R.S. 36-2804(B)(1)(c);

6. A site plan;

7. A floor plan of the building or tenant space;

8. If applicable, Building permits (Separate submittal) in compliance with Tempe's Building Code and Fire Code; and

9. A Security Plan, in compliance with Section 3-426(C).

CHAPTER 5 – NON-CONFORMING USE OR DEVELOPMENT

Section 3-501 Purpose.

The purpose of this section is to allow *non-conforming uses* and *developments* to continue, but not to encourage their perpetuation; and ultimately bring *development* and uses into conformance with this Code.

Section 3-502 General Provisions.

A. Legal Non-Conforming Uses and Non-Conforming Developments. Nothing in this Code shall affect existing property or the right to its continued use for the purpose used at the time the Code takes effect, nor to make any reasonable repairs or *alterations* in *buildings* or property used for such legal existing purpose.

B. Approved Projects. Nothing in this Code shall be deemed to require a change in the plans, construction, or designated use of any *building* for which a *building* permit has been lawfully issued prior to the effective date of adoption or amendment of this Code.

Section 3-503 Legal Non-Conforming Development.

All *developments* may be maintained but shall not be re-erected, relocated, or replaced unless brought into compliance with this Code. Freestanding off-premise signs which are legally non-conforming shall be maintained in place and may only be relocated in accordance with Section 4-903(J)(2) with a development agreement that may be entered into at the discretion of the City Council.

Section 3-504 Legal Non-Conforming Use.

A *non-conforming use* may be expanded or enlarged to an extent not exceeding twenty-five percent (25%) of the land area or *building* floor area devoted to the use at the time it became non-conforming. Such expansion shall require a *use permit*.

Section 3-505 Discontinuance of a Legal Non-Conforming Use.

Whenever a *non-conforming use* has been abandoned or ceases to exist for a period in excess of one (1) year, such use shall not thereafter be re-established, as long as the period of non-use is attributable at least in part to the property owner, tenant or other person or entity in control of the use. For purposes of this Code, rental payments or lease payments and taxes shall not be considered as a continued use.

Section 5-103 General Regulations.

A. Rio Salado Advisory Commission. (Repealed)

B. Review Procedure and Criteria. Proposals will be evaluated by the Tempe Rio Salado Advisory Commission, for applications processed through all decision-making bodies, in accordance with the overall intent of the following Tempe Rio Salado Plan objectives:

1. Encourage the optimum *development* of land along the Salt River including: residential, commercial or industrial, open space, transportation and circulation, public facilities and *services* and adjoining land uses;

2. Promote the *development* of recreational facilities; and

3. Combine flood control with environmental design including the integration of lakes, ponds and streams.

Section 5-104 Additional Information and Regulations.

The following additional requirements apply:

A. Flood Control. Flood control access zones in the district are:

1. Zone "A": No objects or *structures* of any kind that would impede the motion of a maintenance vehicle are permitted in the fifteen (15) feet closest to the channel on either the levee or terrace as shown in Figure 5-104A;

2. Zone "B": Only landscape and removable benches, ramadas or similar equipment that are approved by both the Flood Control District of Maricopa County and the city are permitted either in the ten (10) feet adjacent to the levee when the backfill is even with the top of the levee or the fifteen (15) feet adjacent to the base of the levee when the backfill is below the top of the levee as shown above. Replacement of any structural or *landscape* features within Zone "B" that are damaged as a result of emergency *maintenance* activities by the Flood Control District of Maricopa County shall be the sole responsibility of the owner or lessee of the site on which the features are located; and

3. When the backfill is above the top of levee, Zone "A" restrictions apply, but there are no Zone "B" restrictions on objects or *structures* with regard to maintenance vehicle access.

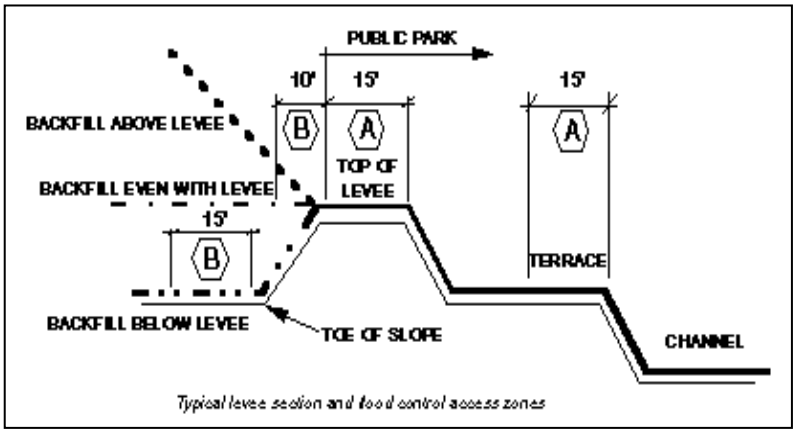

Figure 5-104A. Flood Control

City code reference—See TCC Chapter 7, bicycles; TCC §12-16 et seq., flood control; TCC §12-56 et seq., storm water retention.

a. An increase in the *floor area* proposed for non-residential use by less than ten percent (10%) where previously specified, unless such increase fails to meet the development standards;

b. A reduction of less than 10 percent (10%) of the area reserved for *landscape*, *open space*, or outdoor living area, unless such reduction fails to meet the development standards; or

c. Changes similar to those listed in subsection (a) and (b) that are not likely to have an adverse impact on adjoining properties, as determined by the Community Development Director, or designee.

2. Major Modifications to Approved Plans. A major modification is a significant change that exceeds the threshold(s) provided for a minor modification under 6-312(C)(1) or changes the basic intent of the original plans, as determined by the Community Development Director, or designee. Major modifications shall be processed through the original or appropriate decision-making body.

3. Minor Modifications to Conditions of Approval. A minor modification, processed through an administrative review, is one that does not change the basic intent of the condition as determined by the Community Development Director, or designee.

4. Major Modifications or Elimination of Conditions of Approval. A major modification changes the basic intent of the original condition as determined by the Community Development Director, or designee, or eliminates the condition. Major modifications shall be processed through the original or appropriate decision-making body.

D. Approval Criteria.

1. Minor Modifications. Minor modifications are administrative decisions and may be approved by staff when they meet the basic thresholds defined in this section, and when approval does not cause a violation of any provision of this Code.

2. Major Modifications. The approval criteria for major modifications are the same as for the original decision.

3. Elimination of Conditions of Approval. A request to remove condition(s) of approval shall only be granted if the decision-making body determines that:

a. The applicant or owner has demonstrated that a mistake of law or fact occurred, and that the mistake was substantial enough to warrant modification or removal of conditions; or

b. The condition could not be implemented because it is beyond the reasonable control of the applicant and the modification will not require a significant modification of the original decision; or

c. The circumstances have changed to the extent that the condition(s) is no longer needed or warranted; or

d. A different condition(s) would better accomplish the purpose of the original condition.

Section 6-313 Security Plan.

A. Purpose. The purpose of approving a security plan is to protect the public health, safety, and welfare through crime prevention measures that are tailored to proposed land uses.

B. Applicability and Procedure. Security plans are required for the following uses subject to the standards contained in Chapter 26, Article V, Security Plans, of the Tempe City Code:

1. *Bars*, cocktail lounges, taverns, discotheques, nightclubs and similar businesses;

2. *Adult-oriented businesses*;

3. Recreational or amusement businesses, including both indoor and outdoor activities, including pool halls and *video arcades*;

4. *Entertainment* as accessory to *restaurant* facilities, *bars* or similar establishments;

5. Hotels and motels;

6. Convenience stores;

7. *Medical marijuana dispensary* or *cultivation facility*; and

8. Any other use determined by the Community Development Director or the Chief of Police, or their designees, to be similar to a use listed immediately above.

Security plans for uses within the MU-Ed District shall be formulated in coordination with the *Public University*.

2. *Rear*. The rear lot line of a lot is that lot line opposite to the front lot line. Where the side lot lines meet in a point (if a radius, an extension of side lot lines to an intersecting point), the rear lot line shall be assumed to be a line not less than ten (10) feet long, lying within the lot and parallel to a line tangent to the front property line at its midpoint.

3. *Side*. The side lot lines are those lot lines connecting the front and rear lot lines.

Figure 7-113 F.

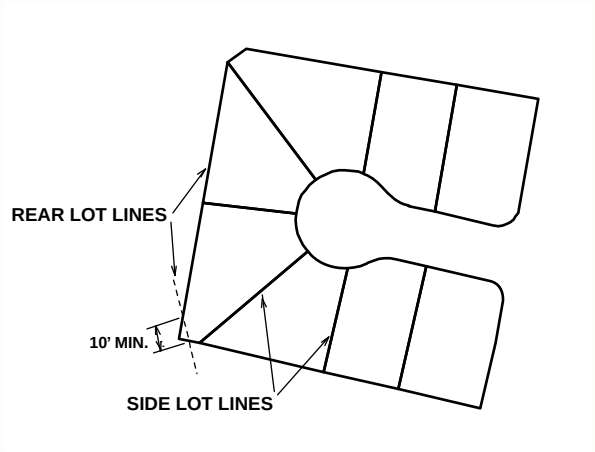

Section 7-114 "M" Definitions.

Maintenance means the replacing of a part, or parts, or the general periodic upkeep, of buildings, structures, landscaping and lighting, made unusable or deteriorated by ordinary wear or tear, vandalism, or by the weather that does change form, materials or color.

Manufactured building means a transportable building that is manufactured specifically to be transported and placed on a building site. Includes manufactured homes, mobile homes, manufactured office and storage buildings, and similar buildings.

Manufactured home means a transportable single-family dwelling conforming to the Manufactured Housing Construction and Safety Standards Code of the United States Department of Housing and Urban Development.

Massage establishment means a business that practices or administers within the city, any massage or body work techniques as defined in the Tempe City Code, Chapter 16A, for a fee or income of any kind.

Mechanical equipment means any equipment ancillary to the function of a structure including, but not limited to, heating or cooling equipment; pool pumps and filters; electrical equipment, transformers, satellite receiving earth stations, including dishes and antennas; vaults and cabinets for telecommunication towers; solar heating/cooling devices; exhaust stacks and roof vents; and similar equipment.

Medical marijuana means all parts of any plant of the genus cannabis whether growing or not, and the seeds of such plant to treat or alleviate a registered qualifying patient's debilitating medical condition or symptoms associated with the patient's debilitating medical condition.

Medical marijuana cultivation facility means an entity that cultivates or manufactures marijuana by the means of cooking, blending, or incorporating into consumable/edible goods or other means for a *medical marijuana dispensary*.

Medical marijuana dispensary means a not-for-profit entity that acquires, possesses, delivers, transfers, transports, supplies, sells or dispenses marijuana or related supplies to cardholders.

Mezzanine means an intermediate building story that projects in the form of a balcony.

Mini-warehouse means a commercial use in which enclosed storage space divided into separate compartments no larger than five hundred (500) square feet in area is provided for use by individuals to store personal items or by businesses to store material for operation of a business establishment at another location.

Mixed-Use means the combination on a site of residential uses with commercial uses.

Mixed use means, in the MU-Ed zoning district, uses that are a combination of either a *Public University* use or *Public University* related use and a commercial and/or residential use within the same building or project.

Mobile home means a dwelling unit built on a chassis in excess of eight (8) feet in width and forty (40) feet in length and containing complete electrical, plumbing and sanitary facilities, and designed to be installed on a temporary or a permanent foundation for permanent living quarters.

Mobile home park means a development providing rental or individually-owned spaces for occupancy by mobile homes, together with certain accessory buildings and uses provided for the benefit and enjoyment of the residents of the park.

Mobile home subdivision means a single-family subdivision that is to be used specifically as single-family residential uses, for mobile homes. Expressly prohibited for residential purposes are buses, recreational vehicles, motor homes, campers, trailers and other similar vehicles.

Model homes means single-family residential homes built and used by developers for the initial purpose of showing prospective buyers similar type homes for sale. Model homes are not used for residential purposes until the home is sold for this use.

Motel see "*hotel*".

Motor vehicle see "*vehicle, motor*".

Motorist amenity means any use that provides services to people in their vehicles or services the vehicle itself. Examples include *drive-through*s, drive-ins, auto service station, or car wash.

Multi-family dwelling means two (2) or more dwelling units in one structure.

Section 7-115 "N" Definitions.

Non-conforming development means a development that does not fully comply with a Code standard because of setbacks, building height, lot coverage, signs, landscape or with some other standard of this Code.

Non-conforming use means a use that is not permitted outright and has not received conditional approval (e.g., use permit) in the district, but was lawfully established prior to it becoming nonconforming.

Ordinance Number	Adoption Date	Subject or Description	Location in Code
2008.48	Nov. 6, 2008	Zoning Map Amendment from CSS,R-4 to CSS,R-4(TOD) (PAD)	Sec. 2-107
2008.61	Dec. 11, 2008	Zoning Map Amendment from R1-6 to CSS	Sec. 2-107
2008.57	Dec. 11, 2008	Zoning Map Amendment from R1-6, R-3 to R-3R,R-4(PAD)	Sec. 2-107
2008.66	Apr. 9, 2009	Zoning Map Amendment from R1-6,R/O,CSS to MU-2(PAD)	Sec. 2-107
2009.14	Apr. 23, 2009	Zoning Map Amendment from R-4,CSS(TOD) to MU-4(PAD)(TOD)	Sec. 2-107
2009.12	May 28, 2009	Zoning Map Amendment for the Date Palm Manor Historic Overlay District	Sec. 2-107
2009.13	May 28, 2009	Zoning Map Amendment Historic Property Designation	Sec. 2-107
2009.15	Oct. 22, 2009	Code Text Amendment for Abatements; APAC Committee repeal; Hearing Officer duties; revised regulations on Accessory Buildings; New Provisions for Guest Quarters; Small Animals; Card Rooms; Recycling Centers; Commercial and Restaurant uses in Industrial Districts; Outdoor Retailing; Service Entrance and Exits; Outdoor Dining Parking; Development Plan Review Criteria and Time Limitations; Use Permit and Variance Time Limitations; Notice of Appeals; Extension Requests; Revocations; and definitions for Card Room, Columbarium, Donation Bins, Livestock, Poultry, Recycling Centers, Reverse Vending Machines, Small Animals and Smoking Establishment.	Sec. 1-304 Sec. 1-305 Sec. 1-306 Sec. 3-102 Sec. 3-202 Sec. 3-302 Sec. 3-401 Sec. 3-404 Sec. 3-410 Sec. 3-411 Sec. 3-417 Sec. 3-418 Sec. 3-503 Sec. 4-406 Tbl.4-603E Sec. 4-902 Sec. 4-903 Sec. 6-306 Sec. 6-308 Sec. 6-309 Sec. 6-310 Sec. 6-802 Sec. 6-901 Sec. 6-902 Sec. 7-103 Sec. 7-104 Sec. 7-105 Sec. 7-108 Sec. 7-113 Sec. 7-117 Sec. 7-119

Ordinance Number	Adoption Date	Subject or Description	Location in Code
			Sec. 7-120 Sec. 7-121
2009.40	Nov. 5, 2009	Code Text Amendment for Legal Non-Conforming Development and Freeway Signs.	Sec. 3-503 Sec. 6-901 Sec. 6-902
2009.41	March 2, 2010	Historic Designation of the Douglass/Gitlis House	Sec. 2-107
2010.05	April 22, 2010	Code Text Amendment for temporary changes to Lead-In signs; Sale-Lease or Rent signs; Significant Event signs; changes to Way-Finding signs; temporary new section for Leasing Banner signs; and definition for upright sign.	Sec. 4-901 Sec. 4-902 Sec. 4-903
2010.06	May 6, 2010	Annexation of a portion of Miller Road alignment and some adjacent parcels from County to AG.	Sec. 2-107
2010.17	July 1, 2010	Code Text Amendment for changes to permit Charter Schools; a revised Drive-Through Facilities section; clarification to improved paved surfaces; unmounted truck campers in the front yard; Directional sign changes; posting for General Plans; and modified definitions for RV, Tobacco Retailer and Trailer.	Sec. 1-208 Sec. 3-102 Sec. 3-202 Sec. 3-302 Sec. 3-408 Sec. 4-502 Sec. 2-602 Sec. 4-903 Sec. 6-302 Sec. 7-119 Sec. 7-121
2010.03	March 4, 2010	City Code Amendment repealing the section pertaining to the Rio Salado Citizen Advisory Commission.	Sec. 1-304 Sec. 5-103
2011.01	January 27, 2011	Code Text Amendment for regulations pertaining to Medical Marijuana.	Sec. 3-202 Sec. 3-302 Sec. 3-426 Sec. 6-313 Sec. 7-114