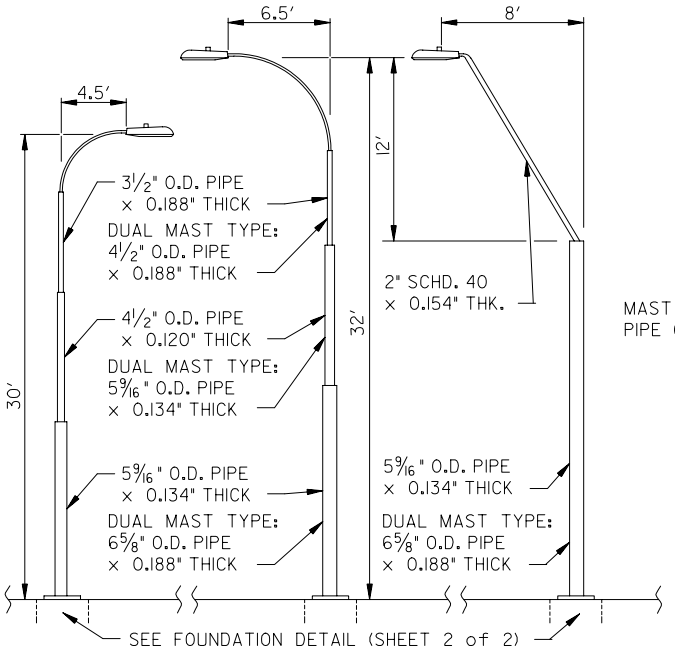

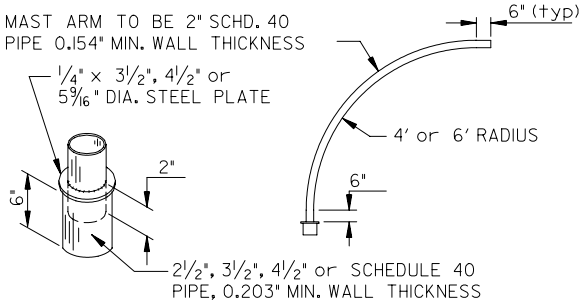

SINGLE MAST ARM

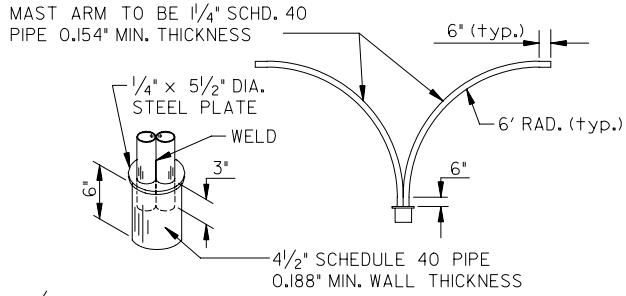

DUAL MAST ARM

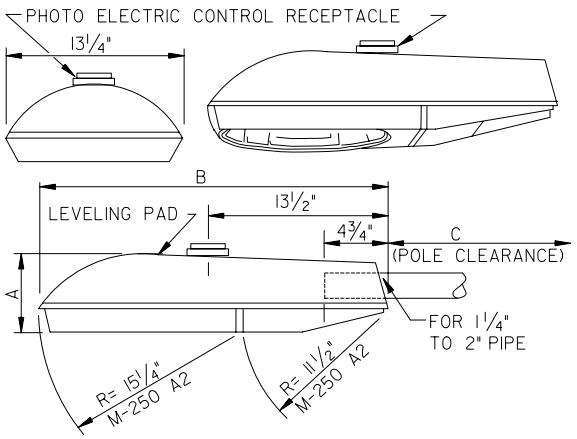

ACCEPTED LUMINAIRE TYPES
(OR APPROVED EQUAL)

LUMINAIRE TYPE	A	B	C
M-250 A2 CUTOFF SERIES	6½"	27½"	12"
M-250 R2 CUTOFF SERIES	5¾"	26¼"	16"

	MNTG. HGT.	ARM	5⁹⁄₁₆" PIPE	4½" PIPE	3½" PIPE	POLE HEIGHT	LAMP
LOCAL/COLLECTOR	30'	4'-6"	10'-0"	7'-9"	7'-9"	25'-6"	100 WATT
ARTERIAL	32'	6'-6"	10'-0"	7'-9"	7'-9"	25'-6"	250 WATT

SPECIFICATION FEATURES:

1) POWER/MODULE BALLAST ASSEMBLY FOR M-256 A2 ONLY.
2) 1½" TO 2" FOUR- BOLT SLIPFITTER.
3) DIE-CAST ALUMINUM HOUSING WITH ELECTROCOAT GRAY PAINT FINISH.
4) ADJUSTABLE MOGUL BASE SOCKET.
5) ALGLAS FINISH ON REFLECTOR.
6) NO-TOOL PE RECEPTACLE.
7) PLUG-IN STARTING AID.
8) TRUE 90 DEGREE CUTOFF.
9) EXTERNAL STAINLESS STEEL BAIL LATCH.

NOTE:

FOR PAINT SPECIFICATIONS SEE TEMPE STREET LIGHTING SPECIFICATION T-101.2

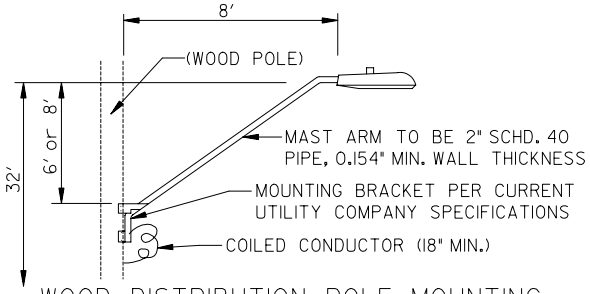

WOOD DISTRIBUTION POLE MOUNTING

APPROVED: _____ DEPUTY PUBLIC WORKS MANAGER CITY ENGINEER _____ DATE

APPROVED: _____ TRAFFIC ENGINEER _____ DATE

CITY OF TEMPE PUBLIC WORKS DEPARTMENT	STREAMLINE STEEL POLE DETAILS	DETAIL T-651 SHEET 1 OF 2 REVISED 2007