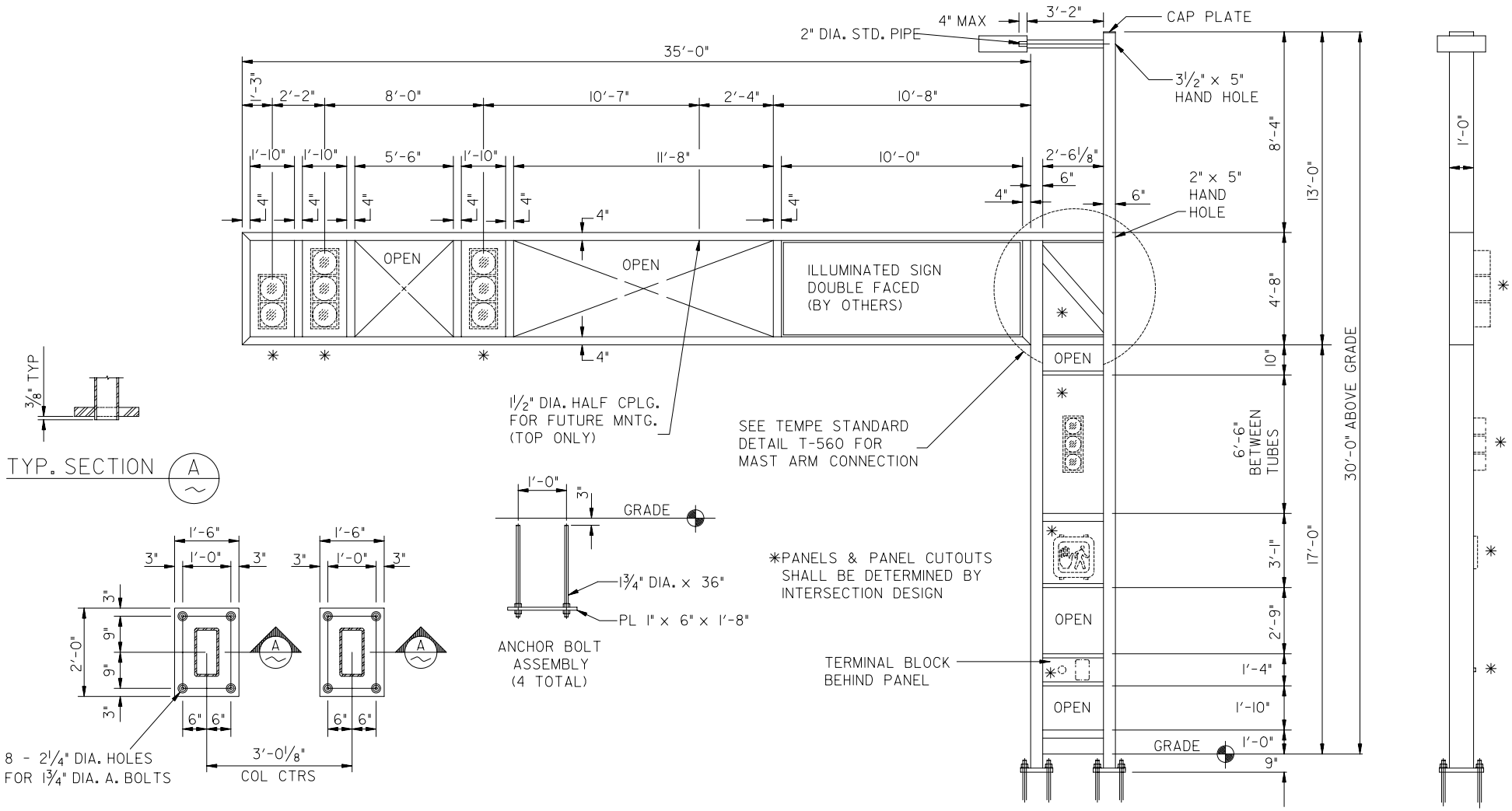

ORIGINAL SIGNATURE ON FILE
AT THE CITY OF TEMPE

APPROVED: _____ _____
DEPUTY PUBLIC WORKS MANAGER TRANSPORTATION — DATE

APPROVED: _____ _____
DEPUTY PUBLIC WORKS MANAGER CITY ENGINEER — DATE

CITY OF TEMPE PUBLIC WORKS DEPARTMENT	MODULAR POLE 'Q' - 35' MAST ARM	ASSEMBLY DRAWING ONLY SPECS AND DESIGN BY T.A. CAID INDUSTRIES, INC TUCSON, AZ	DETAIL T-554 REVISED 2001