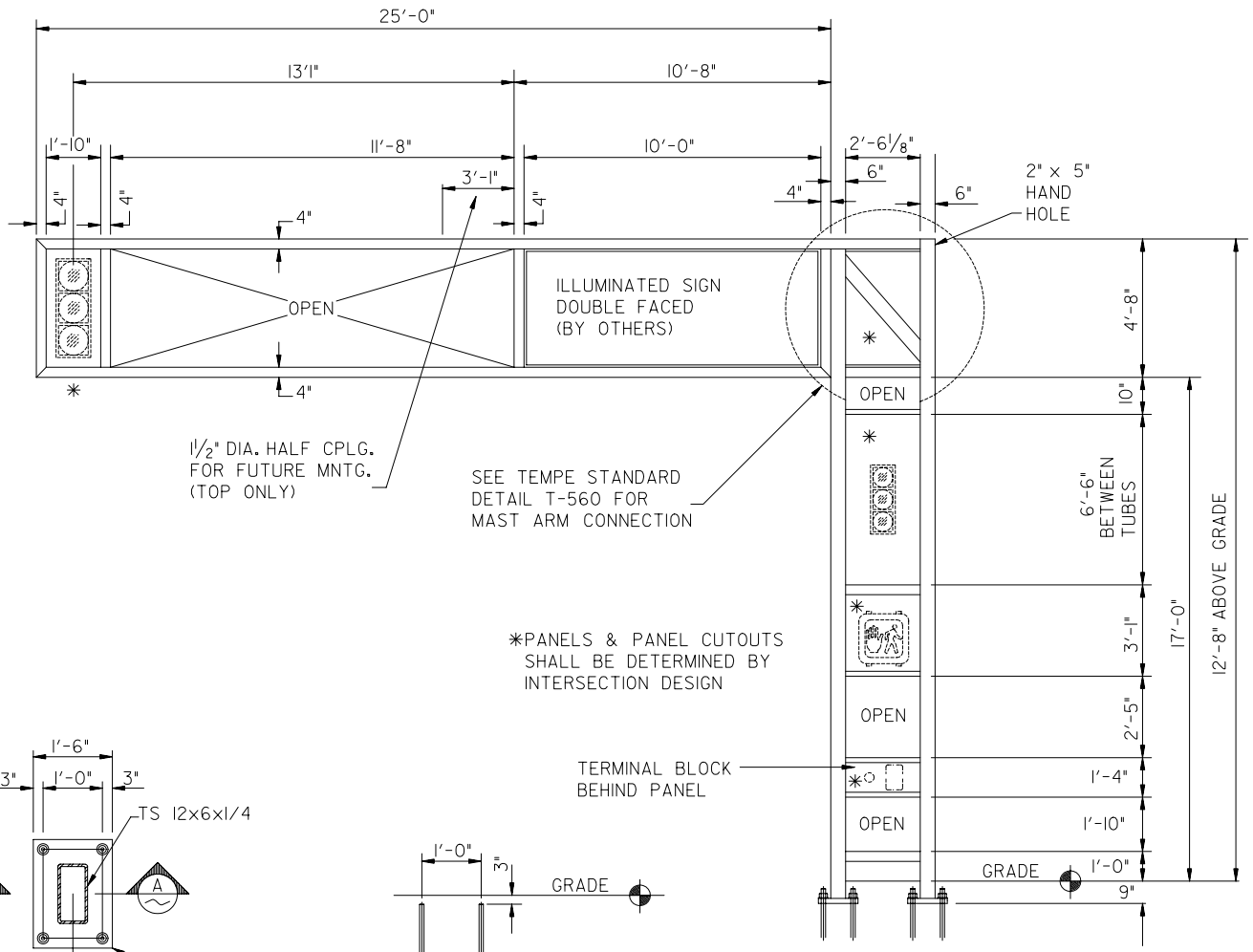

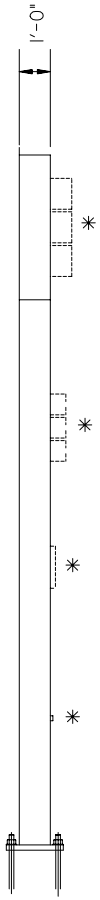

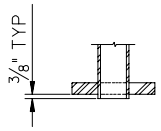

TYP. SECTION A

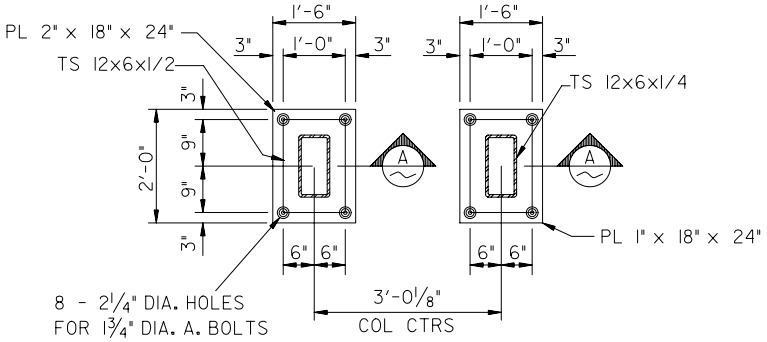

ANCHOR BOLT SETTING PLAN

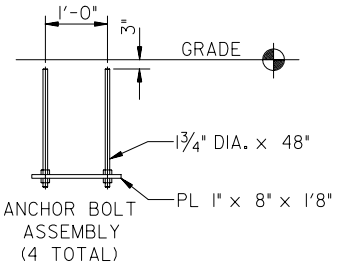

APPROVED: _____ PUBLIC WORKS MANAGER _____ DATE

APPROVED: _____ DEPUTY PUBLIC WORKS MANAGER CITY ENGINEER _____ DATE

CITY OF TEMPE PUBLIC WORKS DEPARTMENT	MODULAR POLE 'J' - 25' MAST ARM	ASSEMBLY DRAWING ONLY SPECS AND DESIGN BY T.A. CAID INDUSTRIES, INC TUCSON, AZ	DETAIL T-541 DRAWN 2005