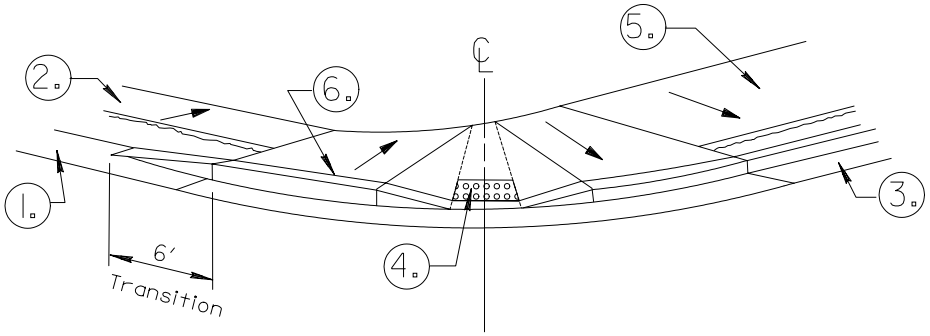

MID - SECTION COLLECTOR - ARTERIAL

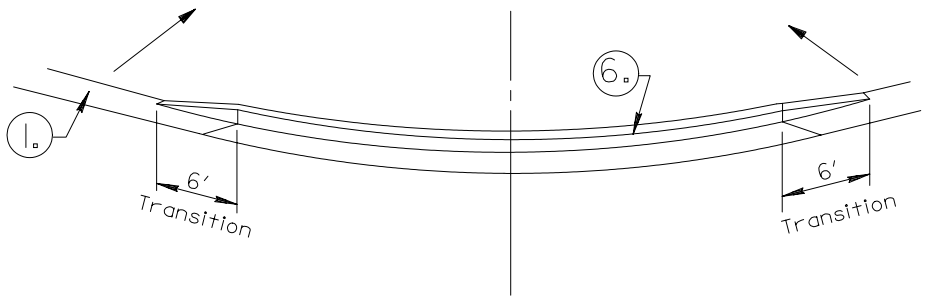

NO SIDEWALK
LOCAL - LOCAL
LOCAL - COLLECTOR
COLLECTOR - COLLECTOR

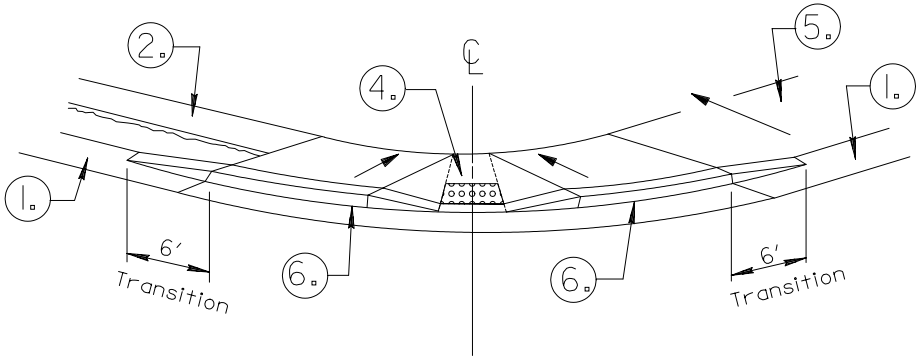

LOCAL - LOCAL
MID - SECTION COLLECTOR - LOCAL
MID - SECTION COLLECTOR - COLLECTOR

INDICATES DIRECTION OF DRAINAGE

NOTES

1. CONCRETE RIBBON CURB (PER MAG STD. DET. NO. 220-B)
2. WIDTH OF CONC. SIDEWALK SHALL BE 8' ALONG ARTERIAL STREETS, 6' ELSEWHERE. 5'-6" LOCAL STREETS MAY BE APPROVED BY CITY. (PER MAG DTD. DET. NO. 230)
3. CONCRETE VERT. CURB & GUTTER (PER MAG STD. DET. NO. 220-A, H=7")
4. CONCRETE SIDEWALK RAMPS SEE RAMP PREFERENCE IN DETAIL T-115. UNDER "REFER TO TEMPE STANDARD DETAILS".
5. CONCRETE SIDEWALK (PER C.O.T. DET T-345)
6. CONCRETE VERTICAL CURB & GUTTER (PER MAG STD. DET. NO. 220-A, H=4")

APPROVED: ORIGINAL SIGNATURE ON FILE AT THE CITY OF TEMPE

DEPUTY PUBLIC WORKS MANAGER
CITY ENGINEER

DATE

CITY OF TEMPE PUBLIC WORKS DEPARTMENT	VERTICAL CURB RETURNS ON RIBBON CURB STREETS	DETAIL T-350 REVISED 2004