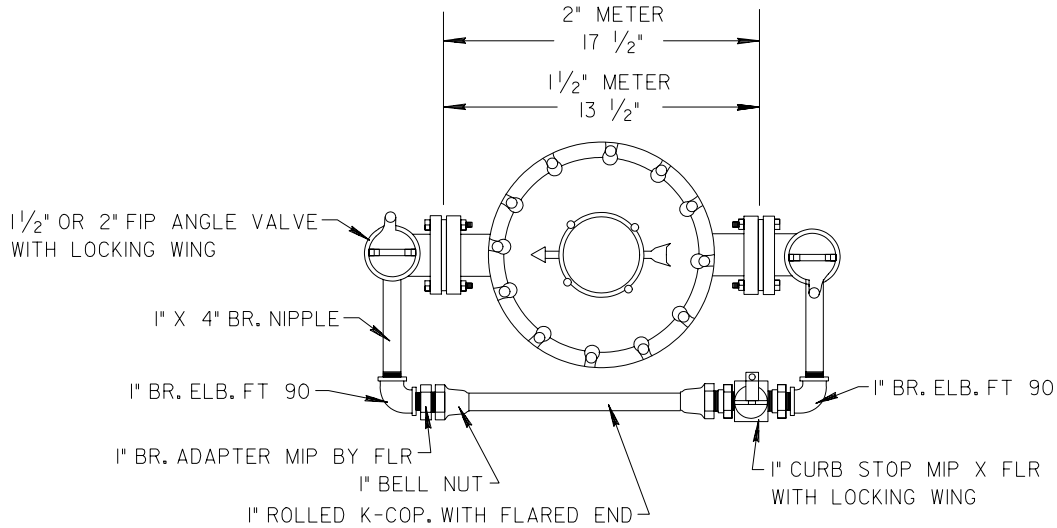

NOTES:

- 1 1/2" METER USE NO. 3 BOX PER STANDARD MAG DETAIL NO. 320
- 2" METER USE NO. 4 BOX PER STANDARD MAG DETAIL NO. 320
- FITTINGS SHALL BE 1 1/2" OR 2" DEPENDING ON METER SIZE
- ANGLE VALVE MUST BE 5" BELOW FINISH GRADE
- NOTES ON DETAIL NO. 212 APPLY TO THIS DETAIL.

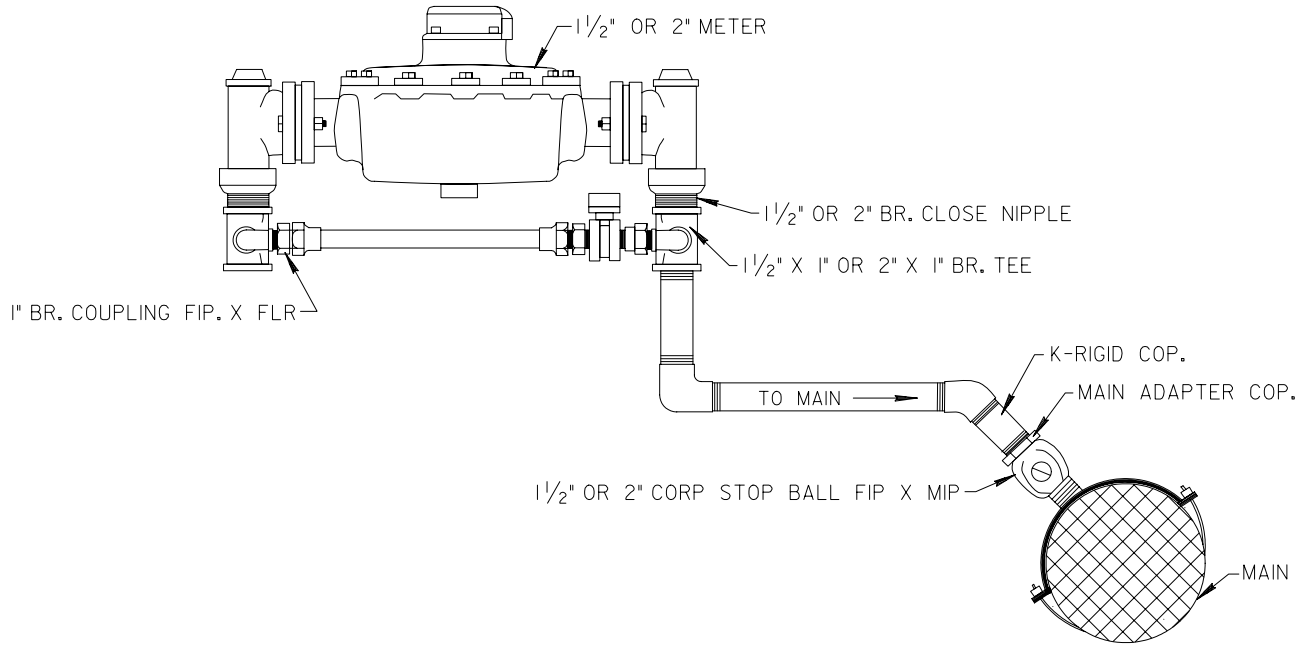

APPROVED: _____ _____
DEPUTY PUBLIC WORKS MANAGER
CITY ENGINEER
DATE

CITY OF TEMPE PUBLIC WORKS DEPARTMENT	1 1/2" & 2" METER INSTALLATION	DETAIL T-212-A 2005